APEX DYNAMICS, INC.

High Precision Rack and Pinion

Main Features

High Precision
High Loading
High Speed
Low Noise
Long Life-Time
Quick Delivery

APEX is the ONLY ONE manufacturer worldwide who produces rack strictly according to specifications regarding :

Geometrical Tolerance of all Dimensions
Defined Straightness, Parallelism and Perpendicularity
Helical Angle and Pressure Angle with Tolerance
Defined Surface Roughness of Teeth
Defined Hardness and Thickness of the Hardened Layer on the Teeth.

APEX is also the ONLY ONE of the world leading brands who designs and produces rack, pinion and gearbox by its own, and provides well coordinated high-quality transmission sets to fulfill different industrial requirements.

Content

Requirement of High-Precision Rack	Page	3
Declaration of Tolerance		7
Induction Hardening for Rack		13
Heat-Treatment for Pinion		14
Rack Quality and Application		15
Rack Order Code		16
Rack with Helical Teeth		17
Rack with Helical Teeth (with Linear-Guide Interface, 90° Type)		29
Rack with Helical Teeth (with Linear-Guide Interface, 180° Type)		30
APEX High Precision Pinion		31
APEX Pinion with Curvic Plate		32
Pinion Order Code		33
Pinion with Helical Teeth (Curvic Plate / EN ISO 9409-1-A)		34
Pinion with Helical Teeth (Welded Plate / EN ISO 9409-1-A)		39
Pinion with Helical Teeth (Teeth Plate / EN ISO 9409-1-A)		45
Pinion with Helical Teeth (DIN 5480 / Spline)		50
Pinion with Helical Teeth (Keyway for APEX AF / KF / AE / PII-Series)		52
Pinion with Helical Teeth (Keyway)		54
Pinion with Helical Teeth (Long Shaft with Keyway for Hollow-Shaft)		61
Pinion with Helical Teeth (Long Shaft without Keyway for Hollow-Shaft)		63
Rack with Straight Teeth		65
Rack with Straight Teeth (with Linear-Guide Interface, 90° Type)		76
Rack with Straight Teeth (with Linear-Guide Interface, 180° Type)		77
Pinion with Straight Teeth (Curvic Plate / EN ISO 9409-1-A)		78
Pinion with Straight Teeth (Welded Plate / EN ISO 9409-1-A)		83
Pinion with Straight Teeth (Keyway)		89
Pinion with Straight Teeth (Keyway / CP System)		98
Pinion with Straight Teeth (Long Shaft with Keyway for Hollow-Shaft)		100
Pinion with Straight Teeth (Long Shaft without Keyway for Hollow-Shaft)		102
Accessory		104
Rack Calculation and Selection		107

Requirement of High-Precision Rack

Requirement and Reason	Technology needed
Good Straightness, Less Torsion • Influence the accuracy of pressure angle, helical angle and pitch error, hence Influence the gear coupling with pinion. • To avoid re-straightening work after long-term stock due to slow release of internal tension.	➢ Heat-treatment ➢ Straightening ➢ Machining on all sides ➢ Teeth milling and grinding ➢ Teeth induction hardening

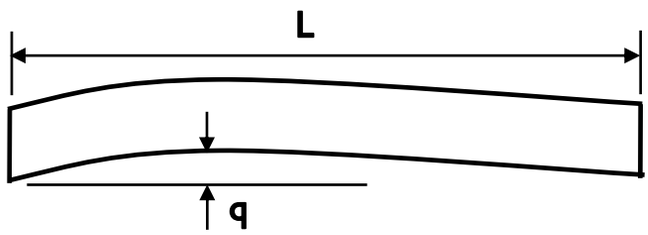

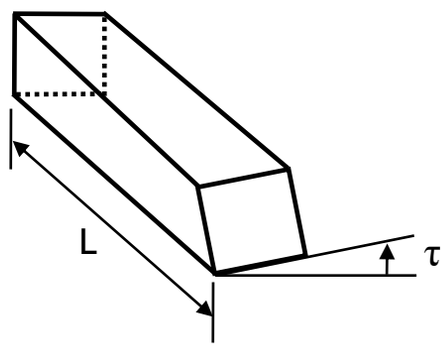

Requirement and Reason	Technology needed
Accurate Pressure Angle α and Helical Angle β • Optimizing gear-coupling with pinion • Optimizing transmission of torque or feed force • For high speed, low noise, less wearing, longer life-time	➢ Heat-treatment ➢ Straightening ➢ Machining on all sides ➢ Teeth milling and grinding ➢ Teeth induction hardening

Left-Hand Helical

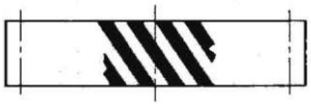

Right-Hand Helical

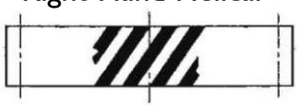

Standard

α = 20°

β = 19°31'42" (19.5283°)

or 0° by Straight Teeth

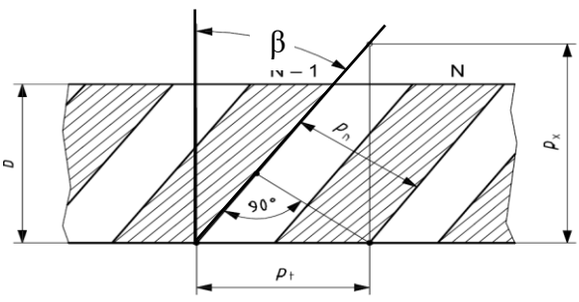

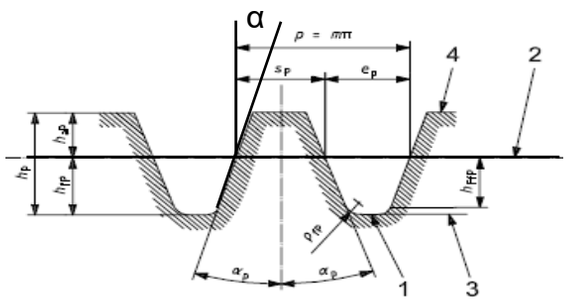

Requirement and Reason	Technology needed
Accurate Over-Pin Height H • A measure of accuracy of teeth profile • Optimizing gear-coupling with pinion • Influence on backlash between rack and pinion	➢ Heat-treatment ➢ Straightening ➢ Machining on all sides ➢ Teeth milling and grinding ➢ Teeth induction hardening

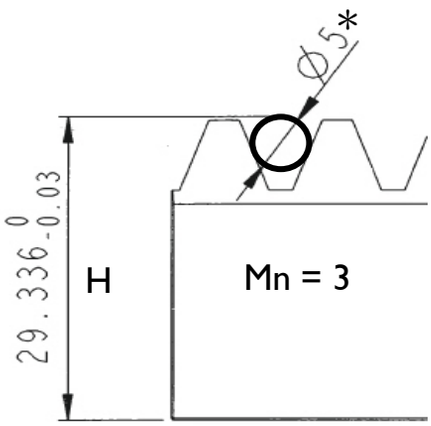

∗ Pin Diameter depending on Mn.

Requirement and Reason	Technology needed
Low Single Pitch Error Es / Low Total Pitch Error Et • Optimizing gear-coupling with pinion • Low noise, less wearing, longer life-time • High positioning accuracy • Influence on backlash	➢ Heat-treatment ➢ Straightening ➢ Machining on all sides ➢ Teeth milling and grinding ➢ Teeth induction hardening

➢ Pitch = π x Module No.

➢ Total Pitch Error Et is to be measured between the first and the last tooth of a rack.

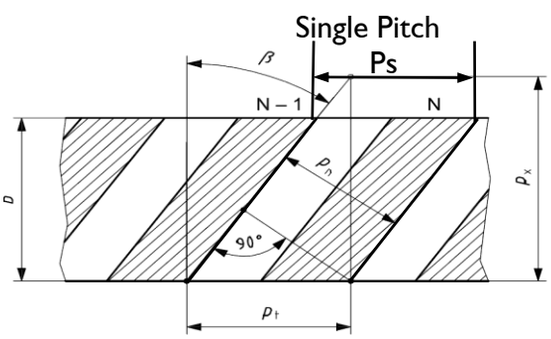

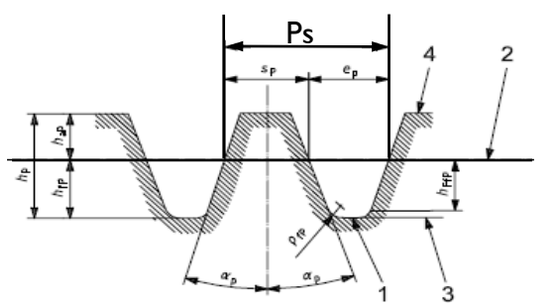

Requirement of High-Precision Rack

Requirement and Reason	Technology needed
Rigidity / Material Hardness • No deformation during gear coupling with Pinion • High strength of rack / High strength of teeth • Transmission of high torque or high feed force • High speed, less wearing, long life-time	➢ Heat-treatment ➢ Teeth induction hardening

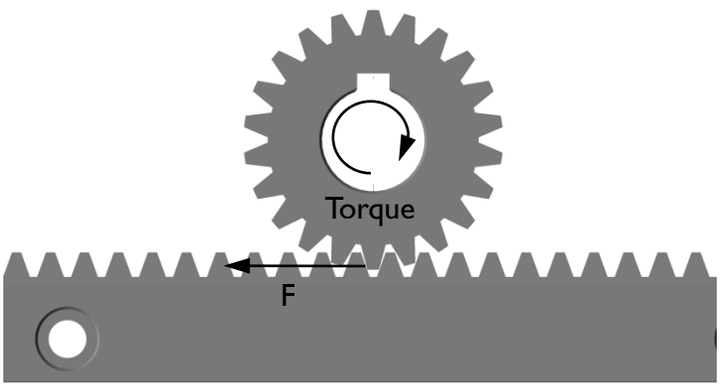

Requirement and Reason	Technology needed
High Surface Hardness • High strength of rack / High strength of teeth • Transmission of high torque or high feed force • High wearing resistance	➢ Heat-treatment ➢ Induction hardening ➢ Teeth grinding
Thickness of Hardened-Layer • Preserve accuracy and long life-time	
Symmetry of Hardened-Layer on teeth profiles • Preserve accuracy and long life-time in both moving directions on the rack	

Qualified induction hardening and teeth grinding

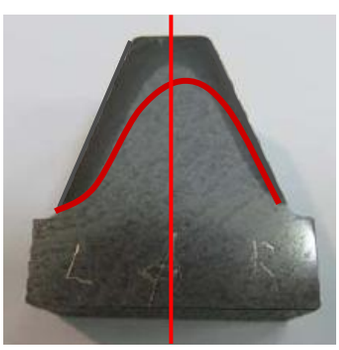

Bad induction hardening and / or bad teeth grinding

Requirement and Reason	Technology needed
Low Remaining Magnet • Prevent adhesion of particles between the rack and pinion which leads to pitting and damage the teeth profile. • Smooth running • Preserve accuracy and long life-time	➢ Degauss device

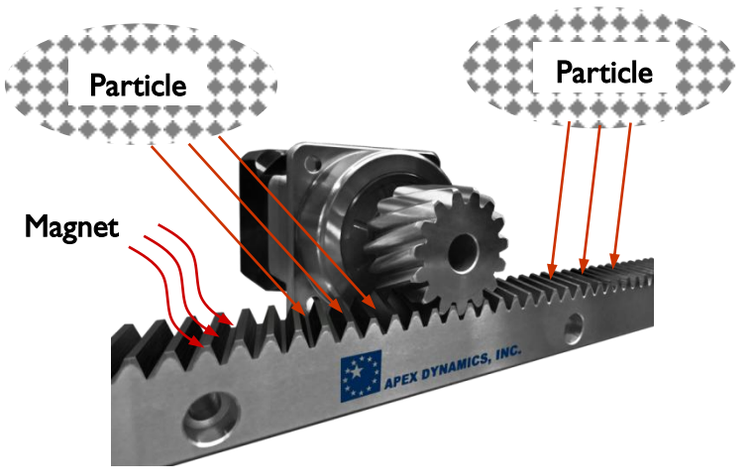

APEX rack has been degaussed until 10 ± 3 Gauss!

Requirement and Reason	Technology needed
Magnetic Crack Inspection • Preserve accuracy • Guarantee of long life-time	➢ Magnetic crack inspection device

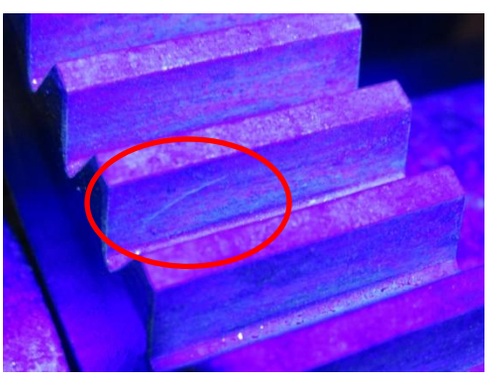

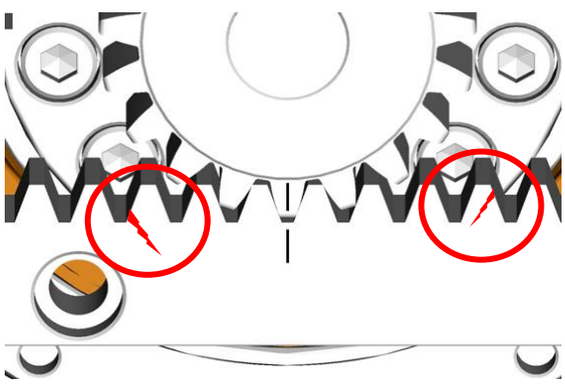

APEX rack has been checked by Magnetic Crack Inspection Device!

Declaration of Tolerance

Parallelism and Perpendicularity

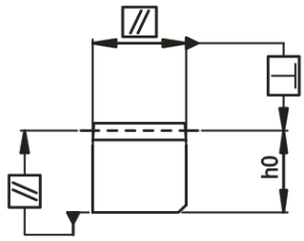

(mm)

Quality / Cross-Section	Q4 ~ Q5		Q6		Q6M		Q8 / Q9		Q10	
	⊥	//	⊥	//	⊥	//	⊥	//	⊥	//
＞10 ~ 16	0.004	0.006	0.006	0.01	0.015	0.025	0.025	0.04	0.04	0.06
＞16 ~ 25	0.005	0.008	0.008	0.012	0.02	0.03	0.03	0.05	0.05	0.08
＞25 ~ 40	0.006	0.01	0.01	0.015	0.025	0.04	0.04	0.06	0.06	0.1
＞40 ~ 63	0.008	0.012	0.012	0.02	0.03	0.05	0.05	0.08	0.08	0.12
＞63 ~ 100	0.01	0.015	0.015	0.025	0.04	0.06	0.06	0.1	0.1	0.15
＞100 ~ 160	0.012	0.02	0.02	0.03	0.05	0.08	0.08	0.12	0.12	0.2

Straightness *

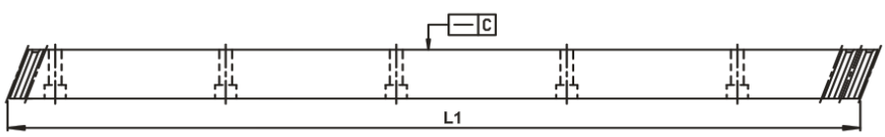

(mm)

Quality	Q4 ~ Q6		Q6M		Q8 ~ Q9		Q10	
Length 1000 mm	Fixed	Free	Fixed	Free	Fixed	Free	Fixed	Free
M1~M2, milled	-	-	0.04	0.45	0.05	0.45	0.08	0.5
M1~M2, ground	0.02	0.4	-	-	-	-	-	-
M3~M6, milled	-	-	0.04	0.45	0.05	0.45	0.08	0.5
M3~M6, ground	0.02	0.3	-	-	-	-	-	-
M8~M12, milled	-	-	0.04	0.45	0.05	0.45	0.08	0.5
M8~M12, ground	0.02	0.25	-	-	-	-	-	-

* Straightness is given either in a free situation (Free) or on a certified flat surface in a fixed mounted situation (Fixed). By the Free-case, the rack is lying on the certified surface with its teeth at the side.

Surface Roughness

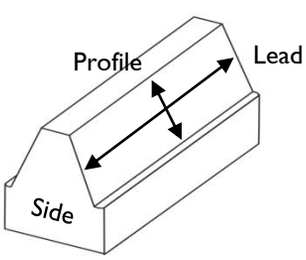

(μm)

Quality	Q 4 ~ Q 6	Q 6M	Q 8 ~ Q 9	Q 10
Lead	Ra ≤ 0.5	Ra ≤ 0.5	Ra ≤ 1.0	Ra ≤ 1.6
Profile	Ra ≤ 1.0	Ra ≤ 1.0	Ra ≤ 3.0	Ra ≤ 6.3
Side	Ra ≤ 0.8	Ra ≤ 2.0	Ra ≤ 2.0	Ra ≤ 2.0

Tolerance of Rack Teeth

APEX declares clearly all the tolerances of rack dimension and geometry, beginning from the design through out the manufacturing.

Pressure Angle Deviation

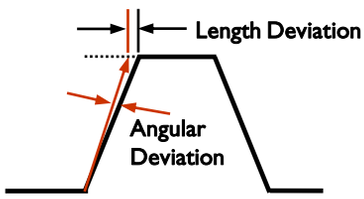

Height Deviation

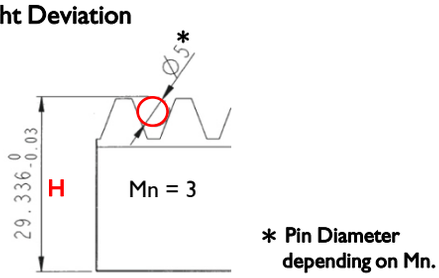

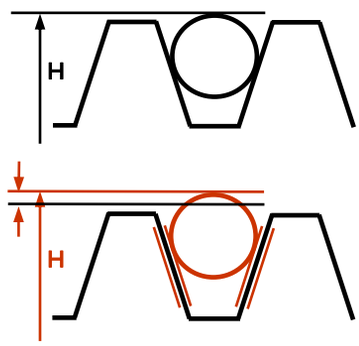

Helical Angle Deviation

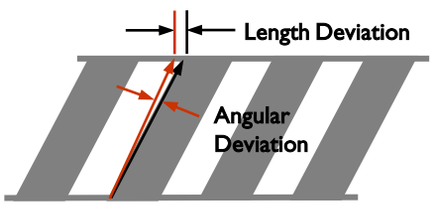

Single Pitch Error

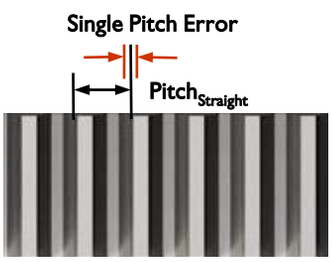

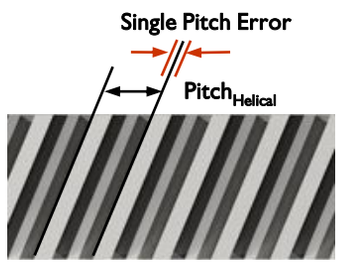

Total Pitch Error

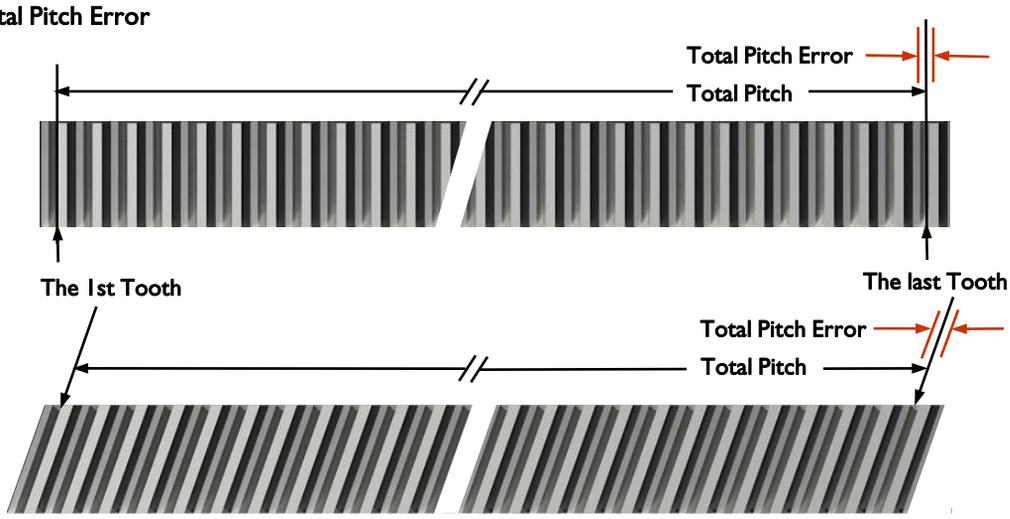

Declaration of Tolerance

Precision / Tolerance of Rack Teeth

Module No.	Deviation	Q4	Q5	Q6	Q6M	Q8H / Q8	Q9	Q10
1	Pressure Angle Deviation (μm)	4	6	8	8	16	23	36
	Helical Angle Deviation (μm)	6	7	9	9	18	28	45
	Over-Pin Height Deviation (μm)	0	0	0	0	0	0	0
		- 19	- 21	- 30	- 45	- 66	-87	- 124
	Single Pitch Error (1) (μm)	4.5	6	8	8	16	23	37
	Total Pitch Error (1) (μm)	17	24	33	33	65	91	146

Module No.	Deviation	Q4	Q5	Q6	Q6M	Q8H / Q8	Q9	Q10
1.5	Pressure Angle Deviation (μm)	4	6	8	8	16	23	36
	Helical Angle Deviation (μm)	6	7	9	9	18	28	45
	Over-Pin Height Deviation (μm)	0	0	0	0	0	0	0
		- 19	- 21	- 30	- 45	- 66	-87	- 124
	Single Pitch Error (1) (μm)	4.5	6	8	8	16	23	37
	Total Pitch Error (1) (μm)	17	24	34	34	66	91	148

Module No.	Deviation	Q4	Q5	Q6	Q6M	Q8H / Q8	Q9	Q10
2	Pressure Angle Deviation (μm)	4	6	8	8	16	23	36
	Helical Angle Deviation (μm)	6.5	8	10	10	20	32	52
	Over-Pin Height Deviation (μm)	0	0	0	0	0	0	0
		- 19	- 20	- 30	- 45	- 66	-87	- 123
	Single Pitch Error (1) (μm)	4.5	6	8	8	16	23	37
	Total Pitch Error (1) (μm)	17	24	34	34	66	91	148

Module No.	Deviation	Q4	Q5	Q6	Q6M	Q8H / Q8	Q9	Q10
2.5	Pressure Angle Deviation (μm)	5	7	10	10	20	28	45
	Helical Angle Deviation (μm)	6.5	8	10	10	20	32	52
	Over-Pin Height Deviation (μm)	0	0	0	0	0	0	0
		- 19	- 21	- 30	- 45	- 66	-87	- 124
	Single Pitch Error (1) (μm)	4.5	6	9	9	18	25	39
	Total Pitch Error (1) (μm)	19	26	36	36	72	100	160

Module No.	Deviation	Q4	Q5 / Q5+	Q6	Q6M	Q8H / Q8	Q9	Q10
3	Pressure Angle Deviation (μm)	5	7	10	10	20	28	45
	Helical Angle Deviation (μm)	6.5	8	10	10	20	32	52
	Over-Pin Height Deviation (μm)	0	0	0	0	0	0	0
		- 19	- 21	- 30	- 45	- 66	-87	- 124
	Single Pitch Error (1) (μm)	4.5	6	9	9	18	25	39
	Total Pitch Error (1) (μm)	19	26	37	37	72	101	162

Module No.	Deviation	Q4	Q5 / Q5+	Q6	Q6M	Q8H / Q8	Q9	Q10
4	Pressure Angle Deviation (μm)	7	9	13	13	25	35	56
	Helical Angle Deviation (μm)	6.5	8	10	10	20	32	52
	Over-Pin Height Deviation (μm)	0	0	0	0	0	0	0
		- 19	- 21	- 30	- 45	- 66	- 66	- 124
	Single Pitch Error (1) (μm)	5	7	10	10	19	18	43
	Total Pitch Error (1) (μm)	20	28	40	40	78	72	175

(1) For helical and straight teeth, basing on the nominal length 1000 mm.
Straightness is to measure on a certified flat surface in a fix mounted situation.

Precision / Tolerance of Rack Teeth

Module No.	Deviation	Q4	Q5 / Q5+	Q6	Q6 M	Q8H / Q8	Q9	Q10
5	Pressure Angle Deviation (μm)	7	9	13	13	25	35	56
	Helical Angle Deviation (μm)	8	10	13	13	25	41	65
	Over-Pin Height Deviation (μm)	0	0	0	0	0	0	0
		-19	-21	-30	-45	-66	-87	-124
	Single Pitch Error (1) (μm)	5	7	10	10	19	27	43
	Total Pitch Error (1) (μm)	20	28	40	40	78	109	175

Module No.	Deviation	Q4	Q5 / Q5+	Q6	Q6 M	Q8H / Q8	Q9	Q10
6	Pressure Angle Deviation (μm)	7	9	13	13	25	35	56
	Helical Angle Deviation (μm)	8	10	13	13	25	41	65
	Over-Pin Height Deviation (μm)	0	0	0	0	0	0	0
		- 19	- 21	- 30	- 45	- 66	-87	- 124
	Single Pitch Error (1) (μm)	5	7	10	10	19	27	43
	Total Pitch Error (1) (μm)	20	28	40	40	78	109	175

Module No.	Deviation	Q4	Q5	Q6	Q6 M	Q8H / Q8	Q9	Q10
8	Pressure Angle Deviation (μm)	8	12	16	16	32	45	72
	Helical Angle Deviation (μm)	8	10	13	13	25	41	65
	Over-Pin Height Deviation (μm)	0	0	0	0	0	0	0
		- 20	- 21	- 31	- 45	- 66	-87	- 124
	Single Pitch Error (1) (μm)	5.5	8	11	11	22	31	49
	Total Pitch Error (1) (μm)	22	31	43	43	84	118	188

Module No.	Deviation	Q4	Q5	Q6	Q6 M	Q8H / Q8	Q9	Q10
10	Pressure Angle Deviation (μm)	8	12	16	16	32	45	72
	Helical Angle Deviation (μm)	8	10	13	13	25	41	65
	Over-Pin Height Deviation (μm)	0	0	0	0	0	0	0
		- 20	- 21	- 31	- 45	- 66	-87	- 124
	Single Pitch Error (1) (μm)	5.5	8	11	11	22	31	49
	Total Pitch Error (1) (μm)	22	31	43	43	84	118	188

Module No.	Deviation	Q4	Q5	Q6	Q8H / Q8	Q9	Q10
12	Pressure Angle Deviation (μm)	11	15	21	42	58	93
	Helical Angle Deviation (μm)	10	13	16	32	51	82
	Over-Pin Height Deviation (μm)	0	0	0	0	0	0
		- 20	- 21	- 31	- 66	-87	- 124
	Single Pitch Error (1) (μm)	7	10	13	26	37	59
	Total Pitch Error (1) (μm)	23	33	46	90	126	202

(1) For helical and straight teeth, basing on the nominal length 1000 mm.
Straightness is to measure on a certified flat surface in a fix mounted situation.

Declaration of Tolerance

Precision / Tolerance of Rack Teeth

Module No.	Deviation	Q4	Q5	Q6	Q6M	Q8H / Q8	Q9	Q10
1	Pressure Angle Deviation (μm)	≦ 4	≦ 6	≦ 8	≦ 8	≦ 16	≦ 23	≦ 36
	Helical Angle Deviation (μm)	≦6	≦7	≦ 9	≦ 9	≦ 18	≦ 28	≦ 45
	Over-Pin Height Deviation (μm)	0	0	0	0	0	0	0
		-19	-21	-30	-45	-105	-139	-198
	Single Pitch Error (1) (μm)	≦ 4.5	≦ 7	≦ 9	≦ 9	≦ 18	≦ 25	≦ 41
	Total Pitch Error (1) (μm)	≦ 19	≦ 27	≦ 38	≦ 38	≦ 74	≦ 103	≦ 165

Module No.	Deviation	Q4	Q5	Q6	Q6M	Q8H / Q8	Q9	Q10
1.5	Pressure Angle Deviation (μm)	≦ 4	≦ 6	≦ 8	≦ 8	≦ 16	≦ 23	≦ 36
	Helical Angle Deviation (μm)	≦ 6	≦ 7	≦ 9	≦ 9	≦ 18	≦ 28	≦ 45
	Over-Pin Height Deviation (μm)	0	0	0	0	0	0	0
		-19	-21	-30	-45	-105	-139	-198
	Single Pitch Error (1) (μm)	≦ 4.5	≦ 7	≦ 9	≦ 9	≦ 18	≦ 25	≦ 41
	Total Pitch Error (1) (μm)	≦ 19	≦ 27	≦ 38	≦ 38	≦ 74	≦ 104	≦ 167

Module No.	Deviation	Q4	Q5	Q6	Q6M	Q8H / Q8	Q9	Q10
2	Pressure Angle Deviation (μm)	≦ 4	≦ 6	≦ 8	≦ 8	≦ 16	≦ 23	≦ 36
	Helical Angle Deviation (μm)	≦ 6.5	≦ 8	≦ 10	≦ 10	≦ 20	≦ 32	≦ 52
	Over-Pin Height Deviation (μm)	0	0	0	0	0	0	0
		-19	-20	-30	-45	-105	-139	-198
	Single Pitch Error (1) (μm)	≦ 4.5	≦ 7	≦ 9	≦ 9	≦ 18	≦ 25	≦ 41
	Total Pitch Error (1) (μm)	≦ 19	≦ 27	≦ 38	≦ 38	≦ 74	≦ 104	≦ 167

Module No.	Deviation	Q4	Q5	Q6	Q6M	Q8H / Q8	Q9	Q10
2.5	Pressure Angle Deviation (μm)	≦ 5	≦ 7	≦ 10	≦ 10	≦ 20	≦ 28	≦ 45
	Helical Angle Deviation (μm)	≦ 6.5	≦ 8	≦ 10	≦ 10	≦ 20	≦ 32	≦ 52
	Over-Pin Height Deviation (μm)	0	0	0	0	0	0	0
		-19	-21	-30	-45	-105	-139	-198
	Single Pitch Error (1) (μm)	≦ 5	≦ 7	≦ 10	≦ 10	≦ 19	≦ 27	≦ 43
	Total Pitch Error (1) (μm)	≦ 21	≦ 29	≦ 41	≦ 41	≦ 81	≦ 113	≦ 181

Module No.	Deviation	Q4	Q5 / Q5+	Q6	Q6M	Q8H / Q8	Q9	Q10
3	Pressure Angle Deviation (μm)	≦ 5	≦ 7	≦ 10	≦ 10	≦ 20	≦ 28	≦ 45
	Helical Angle Deviation (μm)	≦ 6.5	≦ 8	≦ 10	≦ 10	≦ 20	≦ 32	≦ 52
	Over-Pin Height Deviation (μm)	0	0	0	0	0	0	0
		-19	-21	-30	-45	-105	-139	-198
	Single Pitch Error (1) (μm)	≦ 5	≦ 7	≦ 10	≦ 10	≦ 19	≦ 27	≦ 43
	Total Pitch Error (1) (μm)	≦ 21	≦ 30	≦ 42	≦ 42	≦ 81	≦ 114	≦ 182

Module No.	Deviation	Q4	Q5 / Q5+	Q6	Q6M	Q8H / Q8	Q9	Q10
4	Pressure Angle Deviation (μm)	≦ 7	≦ 9	≦ 13	≦ 13	≦ 25	≦ 35	≦ 56
	Helical Angle Deviation (μm)	≦ 6.5	≦ 8	≦ 10	≦ 10	≦ 20	≦ 32	≦ 52
	Over-Pin Height Deviation (μm)	0	0	0	0	0	0	0
		-19	-21	-30	-45	-105	-139	-198
	Single Pitch Error (1) (μm)	≦ 5.5	≦ 8	≦ 11	≦ 11	≦ 21	≦ 29	≦ 47
	Total Pitch Error (1) (μm)	≦ 23	≦ 32	≦ 45	≦ 45	≦ 88	≦ 123	≦ 197

(1) For helical and straight teeth, basing on the nominal length 2000 mm.
Straightness is to measure on a certified flat surface in a fix mounted situation.

Precision / Tolerance of Rack Teeth

Module No.	Deviation	Q4	Q5 / Q5+	Q6	Q6 M	Q8H / Q8	Q9	Q10
5	Pressure Angle Deviation (μm)	≦ 7	≦ 9	≦ 13	≦ 13	≦ 25	≦ 35	≦ 56
	Helical Angle Deviation (μm)	≦ 8	≦ 10	≦ 13	≦ 13	≦ 25	≦ 41	≦ 65
	Over-Pin Height Deviation (μm)	0	0	0	0	0	0	0
		-19	-21	-30	-45	-105	-139	-198
	Single Pitch Error (1) (μm)	≦ 5.5	≦ 8	≦ 11	≦ 11	≦ 21	≦ 29	≦ 47
	Total Pitch Error (1) (μm)	≦ 23	≦ 32	≦ 45	≦ 45	≦ 88	≦ 123	≦ 197

Module No.	Deviation	Q4	Q5 / Q5+	Q6	Q6 M	Q8H / Q8	Q9	Q10
6	Pressure Angle Deviation (μm)	≦ 7	≦ 9	≦ 13	≦ 13	≦ 25	≦ 35	≦ 56
	Helical Angle Deviation (μm)	≦ 8	≦ 10	≦ 13	≦ 13	≦ 25	≦ 41	≦ 65
	Over-Pin Height Deviation (μm)	0	0	0	0	0	0	0
		-19	-21	-30	-45	-105	-139	-198
	Single Pitch Error (1) (μm)	≦ 5.5	≦ 8	≦ 11	≦ 11	≦ 21	≦ 29	≦ 47
	Total Pitch Error (1) (μm)	≦ 23	≦ 32	≦ 45	≦ 45	≦ 88	≦ 123	≦ 197

Module No.	Deviation	Q4	Q5	Q6	Q6 M	Q8H / Q8	Q9	Q10
8	Pressure Angle Deviation (μm)	≦ 8	≦ 12	≦ 16	≦ 16	≦ 32	≦ 45	≦ 72
	Helical Angle Deviation (μm)	≦ 8	≦ 10	≦ 13	≦ 13	≦ 25	≦ 41	≦ 65
	Over-Pin Height Deviation (μm)	0	0	0	0	0	0	0
		-20	-21	-31	-45	-105	-139	-198
	Single Pitch Error (1) (μm)	≦ 6	≦ 9	≦ 12	≦ 12	≦ 24	≦ 33	≦ 53
	Total Pitch Error (1) (μm)	≦ 25	≦ 35	≦ 48	≦ 48	≦ 95	≦ 133	≦ 212

(1) For helical and straight teeth, basing on the nominal length 2000 mm
Straightness is to measure on a certified flat surface in a fix mounted situation.

Induction Hardening for Rack

Scanning Induction Hardening

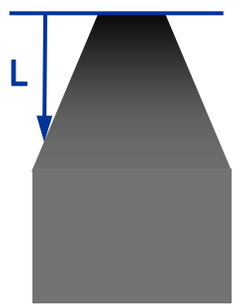

Induction Hardening		
Surface Hardness	Hardness by Effective Thickness **L**	
550 ± 40 HV	440 ± 32 HV	
Module No.	**H**	**L**
1	-	1.75
1.5	-	2.63
1.591 (Pitch 5)	-	2.79
2	-	3.5
2.5	-	4.38
3	-	4.8
3.183 (Pitch 10)	-	5.09

Tooth-by-Tooth Induction Hardening

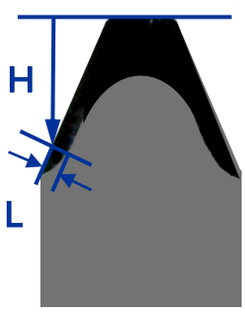

Module No.	**H**	**L**
4	7.2	0.3
4.244 (Pitch 13.33)	7.64	0.3
5	9	0.3
6	10.8	0.3
8	14.4	0.3
10	18	0.3
12	21.6	0.3

Carburized Induction Hardening

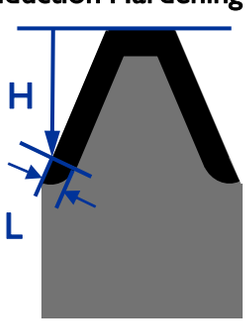

Carburized Induction Hardening		
Surface Hardness	Hardness by Effective Thickness **L**	
640 ~ 720 HV	515 ~ 580 HV	
Module No.	**H**	**L**
2	3.5	0.4
2.5	4.38	0.48
3	4.8	0.55
4	6	0.68
5	10	0.88
6	12	1.03
8	16	0.91
10	20	0.87

Note : In the cross-section, the effective thickness can be guaranteed over 80% in the middle of the teeth width.

Heat-Treatment for Pinion

Material : Alloy Steel
Heat-Treatment : Case Hardening
Teeth : Ground

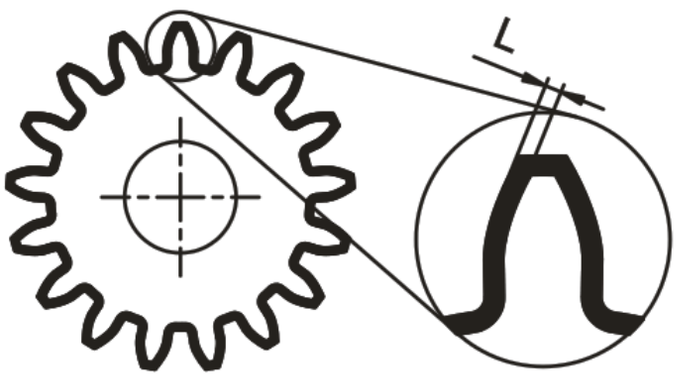

Case Hardening	
Surface Hardness	Hardness by Effective Thickness **L**
640 ~ 720 HV	515 ~ 580 HV

(The surface hardness is measured at the pitch circle.)

Mn	**L** (in mm)
1.5	0.3
1.591（Pitch 5）	0.3
2	0.3
2.5	0.38
3	0.45
3.183（Pitch 10）	0.48
4	0.6
4.244（Pitch 13.33）	0.64
5	0.75
6	0.9
8	1.2
10	1.5

Rack Quality and Application

Quality	Module	Total Pitch Error (μm / 1000mm)	Tooth Thickness Tolerance (μm)	Application
4	5 ~ 12	20 ~ 23	-13 ~ 0	• Measurement equipment • Certification laboratory • High-end machine tools with electrical Preload
5	2 ~ 12	24 ~ 33	-15 ~ 0	• High-end machine tools • Lifting axis • Multi-pinion application
5^+	3 ~ 6	26 ~ 28	-15 ~ 0	• High-end machine tools • Multi-pinion application
6	1 ~ 12	33 ~ 46	-22 ~ 0	• Machine tools • Water-/ laser-/ plasma-cutting machines • Portal machine center • Tube bending machine • Woodworking machine • Combination with linear guide
6M	2 ~ 10	34 ~ 43	-22 ~ 0	• Combination with linear guide • Automatic loading system
8H	2 ~ 4	66 ~ 78	-48 ~ 0	• Welding machine • Robots • Automatic loading system • Linear axis with low load feed
8	1.5 ~ 12	66 ~ 90	-48 ~ 0	• Welding machine • Robots • Automatic loading system • Linear axis with low load feed
9	1 ~ 6	91 ~ 109	-63 ~ 0	• Stainless • Food industry / pharmaceutical industry • Clean room application
10	1 ~ 12	146 ~ 202	-90 ~ 0	• Lifting axis • Automatic loading system • Robots • Outdoor application

Rack Order Code

Example : 02 06 R 100 C 1 0 ( )

02	06	R	100	C	1	0	* *

Coating
0 = None
N = Nickel Plating
P = Phosphate Film
B = Blackening

Screw Holes
1* = Standard
0 = Without Screw Holes
S / X = Strong

Material
C = Carbon Steel
S = Stainless Steel
Q = Q&T Alloy Steel

Rack Length
Rack Length x 0.1 (in mm)

Teeth Angle
R = Right-Hand Helical 19°31'42"
1* = Straight

Quality
4 / 5 / 5^{+} / 6 / 6M / 8H / 8 / 9 / 10

Module-No.
1 ~ 12
The non-integer module no. will be given in alphabet.

* 1 = " one "
* * A1 = For Linear-Guide Interface, 90° Type
A2 = For Linear-Guide Interface, 180° Type

Rack with Helical Teeth

Quality 4 / Carbon Steel
Tooth Thickness Tolerance : -13 ~ 0 μm
Right-Hand Helical Teeth
Teeth Induction Hardened and Ground
All Sides Ground

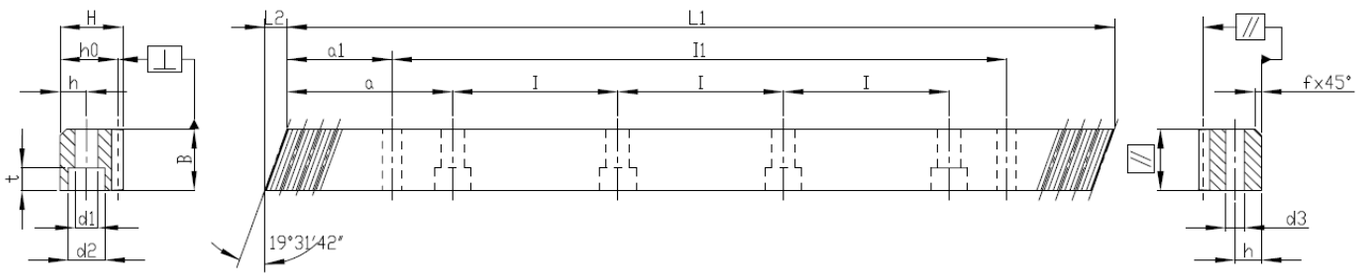

Mn	P_t(1)	L1	L2	Teeth No.	B	H	ho	f	a	l	Hole No.	h	d1	d2	t	a1	l1	d3	f_p(2)	F_p(3)	Order Code *
5	16.66669	1000	17.4	60	49	39	34	3	62.5	125	8	12	14	20	13	37.5	925	11.7	0.005	0.020	0504R100C10
6	20.00003	1000	20.9	50	59	49	43	3	62.5	125	8	16	18	26	17	37.5	925	15.7	0.005	0.020	0604R100C10
8	26.66671	960	28.0	36	79	79	71	3	60.0	120	8	25	22	33	21	120.0	720	19.7	0.006	0.022	0804R100C10
10	33.33339	1000	35.1	30	99	99	89	3	62.5	125	8	32	33	48	32	125.0	750	19.7	0.006	0.022	1004R100C10
12	40.00006	1000	42.6	25	120	120	108	3	40.0	125	8	40	39	58	38	102.5	750	19.7	0.007	0.023	1204R100C10

(1) Teeth Pitch Pt = Module x π / cos (19°31'42") (2) fp ＝Single Pitch Error (3) Fp＝Total Pitch Error

∗ For all models APEX also provides Rack without screw-holes. By ordering please change the 2nd last order-code position from "1" to "0". Please also refer to page 14.

Rack with Helical Teeth

Quality 5 / Carbon Steel
Tooth Thickness Tolerance : -15 ~ 0 μm
Right-Hand Helical Teeth
Teeth Induction Hardened and Ground
All Sides Ground

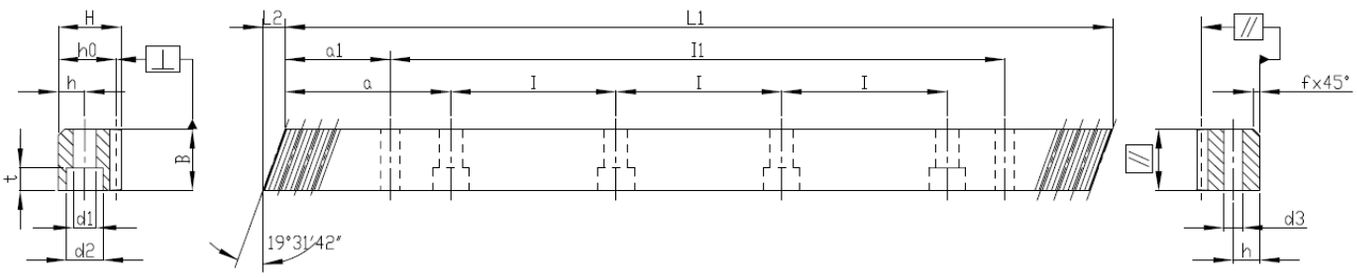

Mn	P_t (1)	L1	L2	Teeth No.	B	H	ho	f	a	l	Hole No.	h	d1	d2	t	a1	l1	d3	f_p (2)	F_p (3)	Order Code *
2	6.66668	500	8.5	75	24	24	22	2	62.5	125	4	8	7	11	7	31.7	436.6	5.7	0.0055	0.021	0205R050C10
2	6.66668	1000	8.5	150	24	24	22	2	62.5	125	8	8	7	11	7	31.7	936.6	5.7	0.006	0.024	0205R100C10
2	6.66668	1246.67	8.5	187	24	24	22	2	62.5	125	10	8	7	11	7	31.7	1183.3	5.7	0.006	0.024	0205R125C10
2	6.66668	1500	8.5	225	24	24	22	2	62.5	125	12	8	7	11	7	31.7	1436.6	5.7	0.006	0.024	0205R150C10
2	6.66668	1746.67	8.5	262	24	24	22	2	62.5	125	14	8	7	11	7	31.7	1683.3	5.7	0.006	0.024	0205R175C10
2	6.66668	2000	8.5	300	24	24	22	2	62.5	125	16	8	7	11	7	31.7	1936.6	5.7	0.007	0.027	0205R200C10
2.5	8.33335	500	10.3	60	29	29	26.5	2	62.5	125	4	9	10	15	9	35	430	7.7	0.006	0.023	2J05R050C10
2.5	8.33335	1000	10.3	120	29	29	26.5	2	62.5	125	8	9	10	15	9	35	930	7.7	0.006	0.026	2J05R100C10
2.5	8.33335	1250	10.3	150	29	29	26.5	2	62.5	125	10	9	10	15	9	35	1180	7.7	0.006	0.026	2J05R125C10
2.5	8.33335	1500	10.3	180	29	29	26.5	2	62.5	125	12	9	10	15	9	35	1430	7.7	0.006	0.026	2J05R150C10
2.5	8.33335	1750	10.3	210	29	29	26.5	2	62.5	125	14	9	10	15	9	35	1680	7.7	0.006	0.026	2J05R175C10
2.5	8.33335	2000	10.3	240	29	29	26.5	2	62.5	125	16	9	10	15	9	35	1930	7.7	0.007	0.029	2J05R200C10
3	10.00002	500	10.3	50	29	29	26	2	62.5	125	4	9	10	15	9	35	430	7.7	0.006	0.023	0305R050C10
3	10.00002	1000	10.3	100	29	29	26	2	62.5	125	8	9	10	15	9	35	930	7.7	0.006	0.026	0305R100C10
3	10.00002	1250	10.3	125	29	29	26	2	62.5	125	10	9	10	15	9	35	1180	7.7	0.006	0.026	0305R125C10
3	10.00002	1500	10.3	150	29	29	26	2	62.5	125	12	9	10	15	9	35	1430	7.7	0.006	0.026	0305R150C10
3	10.00002	1750	10.3	175	29	29	26	2	62.5	125	14	9	10	15	9	35	1680	7.7	0.006	0.026	0305R175C10
3	10.00002	2000	10.3	200	29	29	26	2	62.5	125	16	9	10	15	9	35	1930	7.7	0.007	0.03	0305R200C10

(1) Teeth Pitch Pt = Module x π / cos (19°31'42") (2) fp =Single Pitch Error (3) Fp=Total Pitch Error

∗ For all models APEX also provides Rack without screw-holes. By ordering please change the 2nd last order-code position from "1" to "0". Please also refer to page 14.

Quality 5 / Carbon Steel

Tooth Thickness Tolerance : -15 ~ 0 μm
Right-Hand Helical Teeth
Teeth Induction Hardened and Ground
All Sides Ground

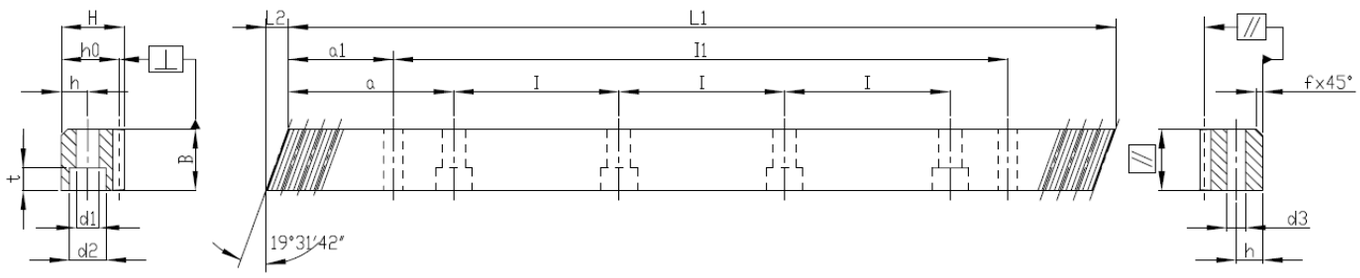

Mn	P_t(1)	L1	L2	Teeth No.	B	H	ho	f	a	l	Hole No.	h	d1	d2	t	a1	l1	d3	f_p(2)	F_p(3)	Order Code *
4	13.33335	506.67	13.8	38	39	39	35	3	62.5	125	4	12	10	15	9	33.3	433	7.7	0.007	0.025	0405R050C10
4	13.33335	1000	13.8	75	39	39	35	3	62.5	125	8	12	10	15	9	33.3	933.4	7.7	0.007	0.028	0405R100C10
4	13.33335	1000	13.8	75	39	39	35	3	62.5	125	8	12	14	20	13	33.3	933.4	11.7	0.007	0.028	0405R100CS0
4	13.33335	1253.34	13.8	94	39	39	35	3	62.5	125	10	12	10	15	9	33.3	1186.7	7.7	0.007	0.028	0405R125C10
4	13.33335	1506.67	13.8	113	39	39	35	3	62.5	125	12	12	10	15	9	33.3	1433.4	7.7	0.007	0.028	0405R150C10
4	13.33335	1506.67	13.8	113	39	39	35	3	62.5	125	12	12	14	20	13	33.3	1433.4	11.7	0.007	0.028	0405R150CS0
4	13.33335	1760	13.8	132	39	39	35	3	62.5	125	14	12	10	15	9	33.3	1693.4	7.7	0.007	0.028	0405R175C10
4	13.33335	2000	13.8	150	39	39	35	3	62.5	125	16	12	10	15	9	33.3	1933.4	7.7	0.008	0.032	0405R200C10
4	13.33335	2000	13.8	150	39	39	35	3	62.5	125	16	12	14	20	13	33.3	1933.4	11.7	0.008	0.032	0405R200CS0
5	16.66669	1000	17.4	60	49	39	34	3	62.5	125	8	12	14	20	13	37.5	925	11.7	0.007	0.028	0505R100C10
6	20.00003	1000	20.9	50	59	49	43	3	62.5	125	8	16	18	26	17	37.5	925	15.7	0.007	0.028	0605R100C10
8	26.66671	960	28	36	79	79	71	3	60	120	8	25	22	33	21	120	720	19.7	0.008	0.031	0805R100C10
10	33.33339	1000	35.1	30	99	99	89	3	62.5	125	8	32	33	48	32	125	750	19.7	0.008	0.031	1005R100C10
12	40.00006	1000	42.6	25	120	120	108	3	40	125	8	40	39	58	38	102.5	750	19.7	0.01	0.033	1205R100C10

(1) Teeth Pitch Pt = Module x π / cos (19°31'42") (2) fp ＝Single Pitch Error (3) Fp＝Total Pitch Error

∗ For all models APEX also provides Rack without screw-holes. By ordering please change the 2nd last order-code position from "1" to "0". Please also refer to page 14.

Quality 5+ / Carbon Steel

Tooth Thickness Tolerance : -15 ~ 0 μm
Right-Hand Helical Teeth
Teeth Induction Hardened and Ground
All Sides Ground

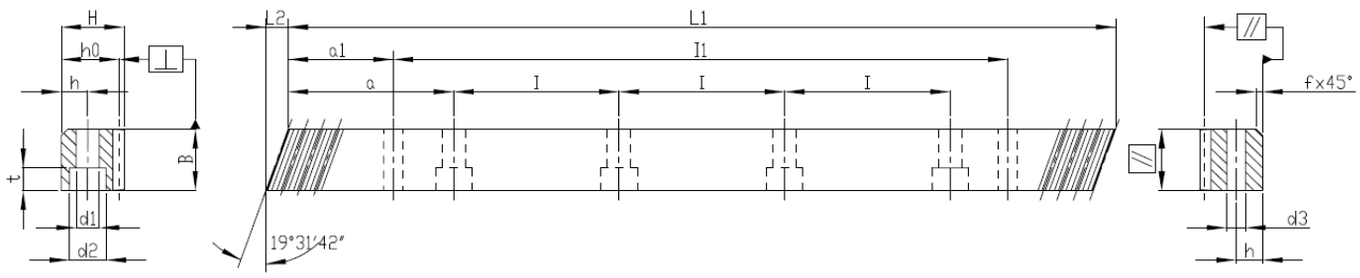

Mn	P_t(1)	L1	L2	Teeth No.	B	H	ho	f	a	l	Hole No.	h	d1	d2	t	a1	l1	d3	f_p(2)	F_p(3)	Order Code *
3	10.00002	500	10.3	50	29	29	26	2	62.5	62.5	7	9	10	15	9	35	430	7.7	0.006	0.023	0305R050CX0
3	10.00002	1000	10.3	100	29	29	26	2	62.5	62.5	15	9	10	15	9	35	930	7.7	0.006	0.026	0305R100CX0
3	10.00002	2000	10.3	200	29	29	26	2	62.5	62.5	31	9	10	15	9	35	1930	7.7	0.007	0.03	0305R200CX0
4	13.33335	506.67	13.8	38	39	39	35	3	62.5	62.5	7	12	12	18	11	33.3	433	9.7	0.007	0.025	0405R050CX0
4	13.33335	1000	13.8	75	39	39	35	3	62.5	62.5	15	12	12	18	11	33.3	933.4	9.7	0.007	0.028	0405R100CX0
4	13.33335	2000	13.8	150	39	39	35	3	62.5	62.5	31	12	12	18	11	33.3	1933.4	9.7	0.008	0.032	0405R200CX0
5	16.66669	500	17.4	30	49	39	34	3	62.5	62.5	7	12	14	20	13	37.5	425	11.7	0.007	0.025	0505R050CX0
5	16.66669	1000	17.4	60	49	39	34	3	62.5	62.5	15	12	14	20	13	37.5	925	11.7	0.007	0.028	0505R100CX0
5	16.66669	2000	17.4	120	49	39	34	3	62.5	62.5	31	12	14	20	13	37.5	1925	11.7	0.008	0.032	0505R200CX0
6	20.00003	500	20.9	25	59	49	43	3	62.5	62.5	7	16	18	26	17	37.5	425	15.7	0.007	0.025	0605R050CX0
6	20.00003	1000	20.9	50	59	49	43	3	62.5	62.5	15	16	18	26	17	37.5	925	15.7	0.007	0.028	0605R100CX0
6	20.00003	2000	20.9	100	59	49	43	3	62.5	62.5	31	16	18	26	17	37.5	1925	15.7	0.008	0.032	0605R200CX0

(1) Teeth Pitch Pt = Module x π / cos (19°31'42") (2) fp = Single Pitch Error (3) Fp = Total Pitch Error

Rack with Helical Teeth

Quality 6 / Carbon Steel
Tooth Thickness Tolerance : -22 ~ 0 μm
Right-Hand Helical Teeth
Teeth Induction Hardened and Ground
All Sides Ground

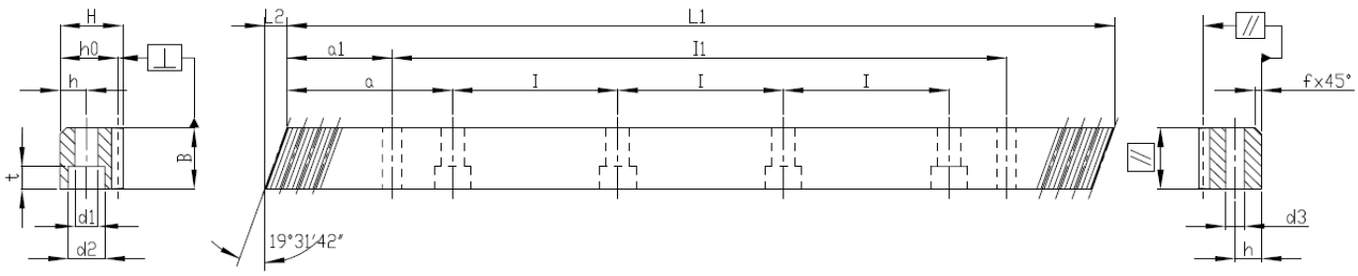

Mn	P_t (1)	L1	L2	Teeth No.	B	H	ho	f	a	l	Hole No.	h	d1	d2	t	a1	l1	d3	f_p (2)	F_p (3)	Order Code *
1	3.33334	500	5.3	150	15	15	14	2	62.5	125	4	6	5	8	5	30.3	439.4	5.7	0.008	0.029	0106R050C10
1	3.33334	1000	5.3	300	15	15	14	2	62.5	125	8	6	5	8	5	30.3	939.4	5.7	0.008	0.033	0106R100C10
1	3.33334	1500	5.3	450	15	15	14	2	62.5	125	12	6	5	8	5	30.3	1439.4	5.7	0.008	0.033	0106R150C10
1.5	5.00001	500	6.7	100	19	19	17.5	2	62.5	125	4	8	7	11	7	31.7	436.6	5.7	0.008	0.029	1J06R050C10
1.5	5.00001	1000	6.7	200	19	19	17.5	2	62.5	125	8	8	7	11	7	31.7	936.6	5.7	0.008	0.034	1J06R100C10
2	6.66668	500	8.5	75	24	24	22	2	62.5	125	4	8	7	11	7	31.7	436.6	5.7	0.008	0.029	0206R050C10
2	6.66668	1000	8.5	150	24	24	22	2	62.5	125	8	8	7	11	7	31.7	936.6	5.7	0.008	0.034	0206R100C10
2	6.66668	1246.67	8.5	187	24	24	22	2	62.5	125	10	8	7	11	7	31.7	1183.3	5.7	0.008	0.034	0206R125C10
2	6.66668	1500	8.5	225	24	24	22	2	62.5	125	12	8	7	11	7	31.7	1436.6	5.7	0.008	0.034	0206R150C10
2	6.66668	1746.67	8.5	262	24	24	22	2	62.5	125	14	8	7	11	7	31.7	1683.3	5.7	0.008	0.034	0206R175C10
2	6.66668	2000	8.5	300	24	24	22	2	62.5	125	16	8	7	11	7	31.7	1936.6	5.7	0.009	0.038	0206R200C10
2.5	8.33335	500	10.3	60	29	29	26.5	2	62.5	125	4	9	10	15	9	35	430	7.7	0.008	0.032	2J06R050C10
2.5	8.33335	1000	10.3	120	29	29	26.5	2	62.5	125	8	9	10	15	9	35	930	7.7	0.009	0.036	2J06R100C10
2.5	8.33335	1250	10.3	150	29	29	26.5	2	62.5	125	10	9	10	15	9	35	1180	7.7	0.009	0.036	2J06R125C10
2.5	8.33335	1500	10.3	180	29	29	26.5	2	62.5	125	12	9	10	15	9	35	1430	7.7	0.009	0.036	2J06R150C10
2.5	8.33335	1750	10.3	210	29	29	26.5	2	62.5	125	14	9	10	15	9	35	1680	7.7	0.009	0.036	2J06R175C10
2.5	8.33335	2000	10.3	240	29	29	26.5	2	62.5	125	16	9	10	15	9	35	1930	7.7	0.01	0.041	2J06R200C10
3	10.00002	500	10.3	50	29	29	26	2	62.5	125	4	9	10	15	9	35	430	7.7	0.008	0.032	0306R050C10
3	10.00002	1000	10.3	100	29	29	26	2	62.5	125	8	9	10	15	9	35	930	7.7	0.009	0.037	0306R100C10
3	10.00002	1250	10.3	125	29	29	26	2	62.5	125	10	9	10	15	9	35	1180	7.7	0.009	0.037	0306R125C10
3	10.00002	1500	10.3	150	29	29	26	2	62.5	125	12	9	10	15	9	35	1430	7.7	0.009	0.037	0306R150C10
3	10.00002	1750	10.3	175	29	29	26	2	62.5	125	14	9	10	15	9	35	1680	7.7	0.009	0.037	0306R175C10
3	10.00002	2000	10.3	200	29	29	26	2	62.5	125	16	9	10	15	9	35	1930	7.7	0.01	0.042	0306R200C10

(1) Teeth Pitch Pt = Module x π / cos (19°31'42") (2) fp ＝Single Pitch Error (3) Fp＝Total Pitch Error

* For all models APEX also provides Rack without screw-holes. By ordering please change the 2nd last order-code position from "1" to "0". Please also refer to page 14.

Rack with Helical Teeth

Quality 6 / Carbon Steel
Tooth Thickness Tolerance : -22 ~ 0 μm
Right-Hand Helical Teeth
Teeth Induction Hardened and Ground
All Sides Ground

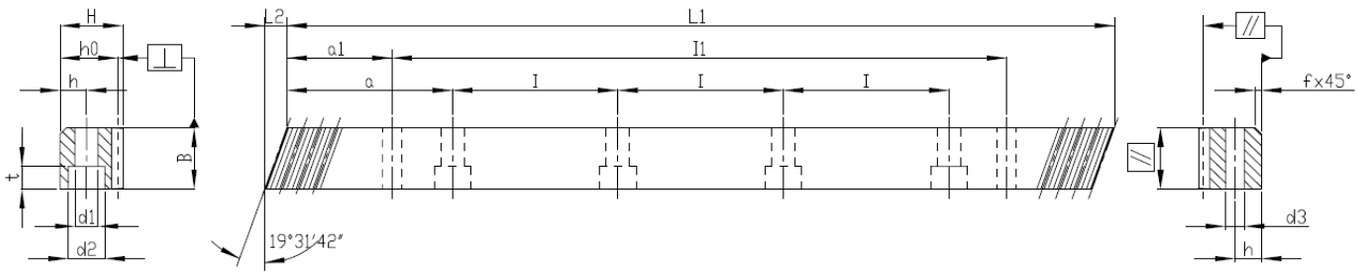

Mn	P_t (1)	L1	L2	Teeth No.	B	H	ho	f	a	l	Hole No.	h	d1	d2	t	a1	l1	d3	f_p (2)	F_p (3)	Order Code *
4	13.33335	506.67	13.8	38	39	39	35	3	62.5	125	4	12	10	15	9	33.3	433	7.7	0.009	0.034	0406R050C10
4	13.33335	506.67	13.8	38	39	39	35	3	62.5	125	4	12	14	20	13	33.3	433	11.7	0.009	0.034	0406R050CS0
4	13.33335	1000	13.8	75	39	39	35	3	62.5	125	8	12	10	15	9	33.3	933.4	7.7	0.01	0.04	0406R100C10
4	13.33335	1000	13.8	75	39	39	35	3	62.5	125	8	12	14	20	13	33.3	933.4	11.7	0.01	0.04	0406R100CS0
4	13.33335	1253.34	13.8	94	39	39	35	3	62.5	125	10	12	10	15	9	33.3	1186.7	7.7	0.01	0.04	0406R125C10
4	13.33335	1506.67	13.8	113	39	39	35	3	62.5	125	12	12	10	15	9	33.3	1433.4	7.7	0.01	0.04	0406R150C10
4	13.33335	1506.67	13.8	113	39	39	35	3	62.5	125	12	12	14	20	13	33.3	1433.4	11.7	0.01	0.04	0406R150CS0
4	13.33335	1760	13.8	132	39	39	35	3	62.5	125	14	12	10	15	9	33.3	1693.4	7.7	0.01	0.04	0406R175C10
4	13.33335	2000	13.8	150	39	39	35	3	62.5	125	16	12	10	15	9	33.3	1933.4	7.7	0.011	0.045	0406R200C10
4	13.33335	2000	13.8	150	39	39	35	3	62.5	125	16	12	14	20	13	33.3	1933.4	11.7	0.011	0.045	0406R200CS0
5	16.66669	500	17.4	30	49	39	34	3	62.5	125	4	12	14	20	13	37.5	425	11.7	0.009	0.034	0506R050C10
5	16.66669	1000	17.4	60	49	39	34	3	62.5	125	8	12	14	20	13	37.5	925	11.7	0.01	0.04	0506R100C10
5	16.66669	1250	17.4	75	49	39	34	3	62.5	125	10	12	14	20	13	37.5	1175	11.7	0.01	0.04	0506R125C10
5	16.66669	1500	17.4	90	49	39	34	3	62.5	125	12	12	14	20	13	37.5	1425	11.7	0.01	0.04	0506R150C10
5	16.66669	1750	17.4	105	49	39	34	3	62.5	125	14	12	14	20	13	37.5	1675	11.7	0.01	0.04	0506R175C10
5	16.66669	2000	17.4	120	49	39	34	3	62.5	125	16	12	14	20	13	37.5	1925	11.7	0.011	0.045	0506R200C10
6	20.00003	500	20.9	25	59	49	43	3	62.5	125	4	16	18	26	17	37.5	425	15.7	0.009	0.034	0606R050C10
6	20.00003	1000	20.9	50	59	49	43	3	62.5	125	8	16	18	26	17	37.5	925	15.7	0.01	0.04	0606R100C10
6	20.00003	1260	20.9	63	59	49	43	3	62.5	125	10	16	18	26	17	37.5	1185	15.7	0.01	0.04	0606R125C10
6	20.00003	1500	20.9	75	59	49	43	3	62.5	125	12	16	18	26	17	37.5	1425	15.7	0.01	0.04	0606R150C10
6	20.00003	1760	20.9	88	59	49	43	3	62.5	125	14	16	18	26	17	37.5	1685	15.7	0.01	0.04	0606R175C10
6	20.00003	2000	20.9	100	59	49	43	3	62.5	125	16	16	18	26	17	37.5	1925	15.7	0.011	0.045	0606R200C10
8	26.66671	480	28	18	79	79	71	3	60	120	4	25	22	33	21	120	240	19.7	0.011	0.037	0806R050C10
8	26.66671	960	28	36	79	79	71	3	60	120	8	25	22	33	21	120	720	19.7	0.011	0.043	0806R100C10
8	26.66671	1200	28	45	79	79	71	3	60	120	10	25	22	33	21	120	960	19.7	0.011	0.043	0806R125C10
8	26.66671	1440	28	54	79	79	71	3	60	120	12	25	22	33	21	120	1200	19.7	0.011	0.043	0806R150C10
8	26.66671	1680	28	63	79	79	71	3	60	120	14	25	22	33	21	120	1440	19.7	0.011	0.043	0806R175C10
8	26.66671	1920	28	72	79	79	71	3	60	120	16	25	22	33	21	120	1680	19.7	0.012	0.048	0806R200C10
10	33.33339	1000	35.1	30	99	99	89	3	62.5	125	8	32	33	48	32	125	750	19.7	0.011	0.043	1006R100C10
10	33.33339	1500	35.1	45	99	99	89	3	62.5	125	12	32	33	48	32	125	1250	19.7	0.011	0.043	1006R150C10
12	40.00006	1000	42.6	25	120	120	108	3	40	125	8	40	39	58	38	102.5	750	19.7	0.013	0.046	1206R100C10

(1) Teeth Pitch Pt = Module x π / cos (19°31'42") (2) fp = Single Pitch Error (3) Fp = Total Pitch Error

* For all models APEX also provides Rack without screw-holes. By ordering please change the 2nd last order-code position from "1" to "0". Please also refer to page 14.

Quality 6M / Carbon Steel

Tooth Thickness Tolerance : -33 ~ 0 μm

Right-Hand Helical Teeth

Teeth Induction Hardened and Ground

All Sides Milled

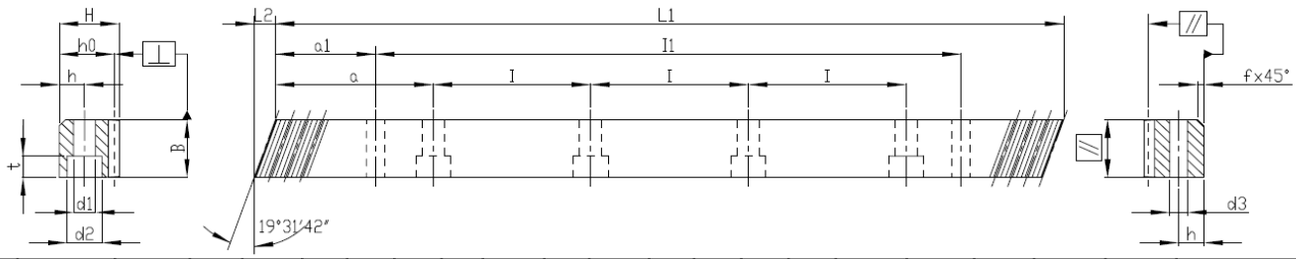

Mn	P_t(1)	L1	L2	Teeth No.	B	H	ho	f	a	l	Hole No.	h	d1	d2	t	a1	l1	d3	f_p(2)	F_p(3)	Order Code *
1	3.33334	500	5.3	150	15	15	14	2	62.5	125	4	6	5	8	5	30.3	439.4	5.7	0.008	0.029	016MR050C10
1	3.33334	1000	5.3	300	15	15	14	2	62.5	125	8	6	5	8	5	30.3	939.4	5.7	0.008	0.033	016MR100C10
1	3.33334	1500	5.3	450	15	15	14	2	62.5	125	12	6	5	8	5	30.3	1439.4	5.7	0.008	0.033	016MR150C10
1.5	5.00001	500	6.7	100	19	19	17.5	2	62.5	125	4	8	7	11	7	31.7	436.6	5.7	0.008	0.029	1J6MR050C10
1.5	5.00001	1000	6.7	200	19	19	17.5	2	62.5	125	8	8	7	11	7	31.7	936.6	5.7	0.008	0.034	1J6MR100C10
2	6.66668	500	8.5	75	24	24	22	2	62.5	125	4	8	7	11	7	31.7	436.6	5.7	0.008	0.029	026MR050C10
2	6.66668	1000	8.5	150	24	24	22	2	62.5	125	8	8	7	11	7	31.7	936.6	5.7	0.008	0.034	026MR100C10
2	6.66668	1246.67	8.5	187	24	24	22	2	62.5	125	10	8	7	11	7	31.7	1183.3	5.7	0.008	0.034	026MR125C10
2	6.66668	1500	8.5	225	24	24	22	2	62.5	125	12	8	7	11	7	31.7	1436.6	5.7	0.008	0.034	026MR150C10
2	6.66668	1746.67	8.5	262	24	24	22	2	62.5	125	14	8	7	11	7	31.7	1683.3	5.7	0.008	0.034	026MR175C10
2	6.66668	2000	8.5	300	24	24	22	2	62.5	125	16	8	7	11	7	31.7	1936.6	5.7	0.009	0.038	026MR200C10
2.5	8.33335	500	10.3	60	29	29	26.5	2	62.5	125	4	9	10	15	9	35	430	7.7	0.008	0.032	2J6MR050C10
2.5	8.33335	1000	10.3	120	29	29	26.5	2	62.5	125	8	9	10	15	9	35	930	7.7	0.009	0.036	2J6MR100C10
2.5	8.33335	1250	10.3	150	29	29	26.5	2	62.5	125	10	9	10	15	9	35	1180	7.7	0.009	0.036	2J6MR125C10
2.5	8.33335	1500	10.3	180	29	29	26.5	2	62.5	125	12	9	10	15	9	35	1430	7.7	0.009	0.036	2J6MR150C10
2.5	8.33335	1750	10.3	210	29	29	26.5	2	62.5	125	14	9	10	15	9	35	1680	7.7	0.009	0.036	2J6MR175C10
2.5	8.33335	2000	10.3	240	29	29	26.5	2	62.5	125	16	9	10	15	9	35	1930	7.7	0.01	0.041	2J6MR200C10
3	10.00002	500	10.3	50	29	29	26	2	62.5	125	4	9	10	15	9	35	430	7.7	0.008	0.032	036MR050C10
3	10.00002	1000	10.3	100	29	29	26	2	62.5	125	8	9	10	15	9	35	930	7.7	0.009	0.037	036MR100C10
3	10.00002	1250	10.3	125	29	29	26	2	62.5	125	10	9	10	15	9	35	1180	7.7	0.009	0.037	036MR125C10
3	10.00002	1500	10.3	150	29	29	26	2	62.5	125	12	9	10	15	9	35	1430	7.7	0.009	0.037	036MR150C10
3	10.00002	1750	10.3	175	29	29	26	2	62.5	125	14	9	10	15	9	35	1680	7.7	0.009	0.037	036MR175C10
3	10.00002	2000	10.3	200	29	29	26	2	62.5	125	16	9	10	15	9	35	1930	7.7	0.01	0.042	036MR200C10
4	13.33335	506.67	13.8	38	39	39	35	3	62.5	125	4	12	10	15	9	33.3	433	7.7	0.009	0.034	046MR050C10
4	13.33335	506.67	13.8	38	39	39	35	3	62.5	125	4	12	14	20	13	33.3	433	11.7	0.009	0.034	046MR050CS0
4	13.33335	1000	13.8	75	39	39	35	3	62.5	125	8	12	10	15	9	33.3	933.4	7.7	0.01	0.04	046MR100C10
4	13.33335	1000	13.8	75	39	39	35	3	62.5	125	8	12	14	20	13	33.3	933.4	11.7	0.01	0.04	046MR100CS0
4	13.33335	1253.34	13.8	94	39	39	35	3	62.5	125	10	12	10	15	9	33.3	1186.7	7.7	0.01	0.04	046MR125C10
4	13.33335	1506.67	13.8	113	39	39	35	3	62.5	125	12	12	10	15	9	33.3	1433.4	7.7	0.01	0.04	046MR150C10
4	13.33335	1760	13.8	132	39	39	35	3	62.5	125	14	12	10	15	9	33.3	1693.4	7.7	0.01	0.04	046MR175C10
4	13.33335	2000	13.8	150	39	39	35	3	62.5	125	16	12	10	15	9	33.3	1933.4	7.7	0.011	0.045	046MR200C10
5	16.66669	500	17.4	30	49	39	34	3	62.5	125	4	12	14	20	13	37.5	425	11.7	0.009	0.034	056MR050C10
5	16.66669	1000	17.4	60	49	39	34	3	62.5	125	8	12	14	20	13	37.5	925	11.7	0.01	0.04	056MR100C10
6	20.00003	500	20.9	25	59	49	43	3	62.5	125	4	16	18	26	17	37.5	425	15.7	0.009	0.034	066MR050C10
6	20.00003	1000	20.9	50	59	49	43	3	62.5	125	8	16	18	26	17	37.5	925	15.7	0.01	0.04	066MR100C10
8	26.66671	960	28	36	79	79	71	3	60	120	8	25	22	33	21	120	720	19.7	0.011	0.043	086MR100C10
10	33.33339	1000	35.1	30	99	99	89	3	62.5	125	8	32	33	48	32	125	750	19.7	0.011	0.043	106MR100C10

(1) Teeth Pitch Pt = Module x π / cos (19°31'42") (2) fp = Single Pitch Error (3) Fp = Total Pitch Error * Refer to the Page 22

Quality 8H / Q&T Alloy Steel

Material Quenched and Tempered
Tooth Thickness Tolerance : -48 ~ 0 μm ∗∗
Right-Hand Helical Teeth
Teeth Milled / All Sides Milled

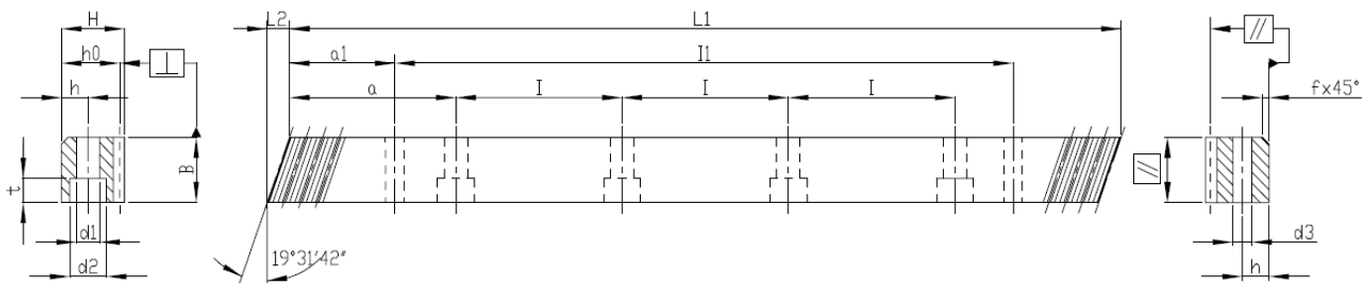

Mn	P_t(1)	L1	L2	Teeth No.	B	H	ho	f	a	l	Hole No.	h	d1	d2	t	a1	l1	d3	f_p(2)	F_p(3)	Order Code *
2	6.66668	500	8.9	75	25	24	22	2	62.5	125	4	8	7	11	7	31.7	436.6	5.7	0.015	0.057	028HR050Q10
2	6.66668	1000	8.9	150	25	24	22	2	62.5	125	8	8	7	11	7	31.7	936.6	5.7	0.016	0.066	028HR100Q10
2	6.66668	1246.67	8.9	187	25	24	22	2	62.5	125	10	8	7	11	7	31.7	1183.3	5.7	0.016	0.066	028HR125Q10
2	6.66668	1500	8.9	225	25	24	22	2	62.5	125	12	8	7	11	7	31.7	1436.6	5.7	0.016	0.066	028HR150Q10
2	6.66668	1746.67	8.9	262	25	24	22	2	62.5	125	14	8	7	11	7	31.7	1683.3	5.7	0.016	0.066	028HR175Q10
2	6.66668	2000	8.9	300	25	24	22	2	62.5	125	16	8	7	11	7	31.7	1936.6	5.7	0.018	0.074	028HR200Q10
3	10.00002	500	10.6	50	30	29	26	2	62.5	125	4	9	10	15	9	35	430	7.7	0.016	0.063	038HR050Q10
3	10.00002	1000	10.6	100	30	29	26	2	62.5	125	8	9	10	15	9	35	930	7.7	0.018	0.072	038HR100Q10
3	10.00002	1250	10.6	125	30	29	26	2	62.5	125	10	9	10	15	9	35	1180	7.7	0.018	0.072	038HR125Q10
3	10.00002	1500	10.6	150	30	29	26	2	62.5	125	12	9	10	15	9	35	1430	7.7	0.018	0.072	038HR150Q10
3	10.00002	1750	10.6	175	30	29	26	2	62.5	125	14	9	10	15	9	35	1680	7.7	0.018	0.072	038HR175Q10
3	10.00002	2000	10.6	200	30	29	26	2	62.5	125	16	9	10	15	9	35	1930	7.7	0.019	0.081	038HR200Q10
4	13.33335	506.67	14.2	38	40	39	35	3	62.5	125	4	12	10	15	9	33.3	433	7.7	0.018	0.068	048HR050Q10
4	13.33335	1000	14.2	75	40	39	35	3	62.5	125	8	12	10	15	9	33.3	933.4	7.7	0.019	0.078	048HR100Q10
4	13.33335	1253.34	14.2	94	40	39	35	3	62.5	125	10	12	10	15	9	33.3	1186.7	7.7	0.019	0.078	048HR125Q10
4	13.33335	1506.67	14.2	113	40	39	35	3	62.5	125	12	12	10	15	9	33.3	1433.4	7.7	0.019	0.078	048HR150Q10
4	13.33335	1760	14.2	132	40	39	35	3	62.5	125	14	12	10	15	9	33.3	1693.4	7.7	0.019	0.078	048HR175Q10
4	13.33335	2000	14.2	150	40	39	35	3	62.5	125	16	12	10	15	9	33.3	1933.4	7.7	0.021	0.088	048HR200Q10

(1) Teeth Pitch Pt = Module x π / cos (19°31'42") (2) fp =Single Pitch Error (3) Fp=Total Pitch Error

∗ For all models APEX also provides Rack without screw-holes. By ordering please change the 2nd last order-code position from "1" to "0". Please also refer to page 14.

∗∗ Basing on the nominal length 1000 mm.

Especially for the application without back-support.

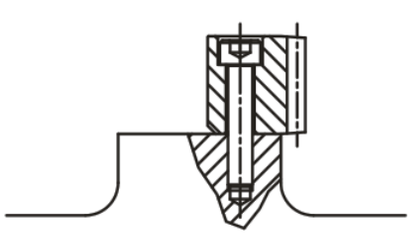

Without alignment / back-support

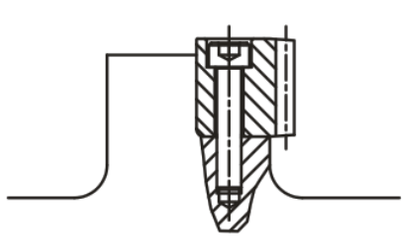

With alignment / back-support

Rack with Helical Teeth

Quality 8 / Carbon Steel
Tooth Thickness Tolerance : -48 ~ 0 μm ∗∗
Right-Hand Helical Teeth
Material Normalized
Teeth Milled and all Sides Milled

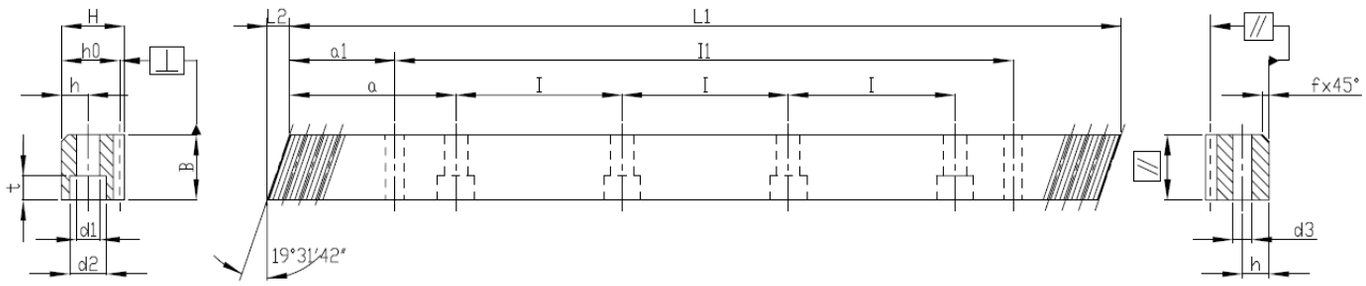

Mn	P_t(1)	L1	L2	Teeth No.	B	H	ho	f	a	l	Hole No.	h	d1	d2	t	a1	l1	d3	f_p(2)	F_p(3)	Order Code *
1.5	5.00001	500	6	100	17	17	15.5	2	62.5	125	4	6	6	10	6	31.7	436.6	5.7	0.015	0.057	1J08R050C10
1.5	5.00001	1000	6	200	17	17	15.5	2	62.5	125	8	6	6	10	6	31.7	936.6	5.7	0.016	0.066	1J08R100C10
1.5	5.00001	1250	6	250	17	17	15.5	2	62.5	125	10	6	6	10	6	31.7	1186.6	5.7	0.016	0.066	1J08R125C10
1.5	5.00001	1500	6	300	17	17	15.5	2	62.5	125	12	6	6	10	6	31.7	1436.6	5.7	0.016	0.066	1J08R150C10
1.5	5.00001	1750	6	350	17	17	15.5	2	62.5	125	14	6	6	10	6	31.7	1686.6	5.7	0.016	0.066	1J08R175C10
1.5	5.00001	2000	6	400	17	17	15.5	2	62.5	125	16	6	6	10	6	31.7	1936.6	5.7	0.018	0.074	1J08R200C10
2	6.66668	500	9.2	75	26	24	22	2	62.5	125	4	8	7	11	7	31.7	436.6	5.7	0.015	0.057	0208R050C10
2	6.66668	1000	9.2	150	26	24	22	2	62.5	125	8	8	7	11	7	31.7	936.6	5.7	0.016	0.066	0208R100C10
2	6.66668	1246.67	9.2	187	26	24	22	2	62.5	125	10	8	7	11	7	31.7	1183.3	5.7	0.016	0.066	0208R125C10
2	6.66668	1500	9.2	225	26	24	22	2	62.5	125	12	8	7	11	7	31.7	1436.6	5.7	0.016	0.066	0208R150C10
2	6.66668	1746.67	9.2	262	26	24	22	2	62.5	125	14	8	7	11	7	31.7	1683.3	5.7	0.016	0.066	0208R175C10
2	6.66668	2000	9.2	300	26	24	22	2	62.5	125	16	8	7	11	7	31.7	1936.6	5.7	0.018	0.074	0208R200C10
2.5	8.33335	500	10.6	60	30	29	26.5	2	62.5	125	4	9	10	15	9	35	430	7.7	0.016	0.062	2J08R050C10
2.5	8.33335	1000	10.6	120	30	29	26.5	2	62.5	125	8	9	10	15	9	35	930	7.7	0.018	0.072	2J08R100C10
2.5	8.33335	1250	10.6	150	30	29	26.5	2	62.5	125	10	9	10	15	9	35	1180	7.7	0.018	0.072	2J08R125C10
2.5	8.33335	1500	10.6	180	30	29	26.5	2	62.5	125	12	9	10	15	9	35	1430	7.7	0.018	0.072	2J08R150C10
2.5	8.33335	1750	10.6	210	30	29	26.5	2	62.5	125	14	9	10	15	9	35	1680	7.7	0.018	0.072	2J08R175C10
2.5	8.33335	2000	10.6	240	30	29	26.5	2	62.5	125	16	9	10	15	9	35	1930	7.7	0.019	0.081	2J08R200C10
3	10.00002	500	11	50	31	29	26	2	62.5	125	4	9	10	15	9	35	430	7.7	0.016	0.063	0308R050C10
3	10.00002	1000	11	100	31	29	26	2	62.5	125	8	9	10	15	9	35	930	7.7	0.018	0.072	0308R100C10
3	10.00002	1250	11	125	31	29	26	2	62.5	125	10	9	10	15	9	35	1180	7.7	0.018	0.072	0308R125C10
3	10.00002	1500	11	150	31	29	26	2	62.5	125	12	9	10	15	9	35	1430	7.7	0.018	0.072	0308R150C10
3	10.00002	1750	11	175	31	29	26	2	62.5	125	14	9	10	15	9	35	1680	7.7	0.018	0.072	0308R175C10
3	10.00002	2000	11	200	31	29	26	2	62.5	125	16	9	10	15	9	35	1930	7.7	0.019	0.081	0308R200C10

(1) Teeth Pitch Pt = Module x π / cos (19°31'42") (2) fp ＝Single Pitch Error (3) Fp＝Total Pitch Error

∗ For all models APEX also provides Rack without screw-holes. By ordering please change the 2nd last order-code position from "1" to "0". Please also refer to page 14.

∗∗ Basing on the nominal length 1000 mm.

Quality 8 / Carbon Steel

Tooth Thickness Tolerance : -48 ~ 0 μm ∗∗
Right-Hand Helical Teeth
Material Normalized
Teeth Milled and all Sides Milled

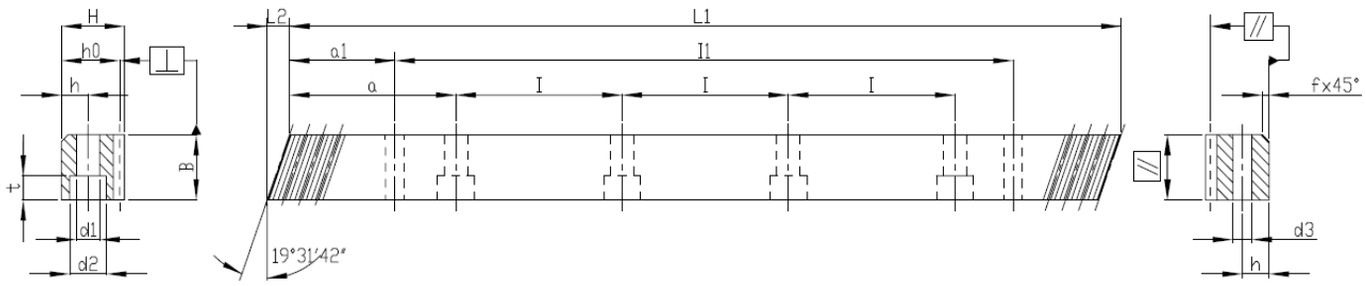

Mn	P_t(1)	L1	L2	Teeth No.	B	H	ho	f	a	l	Hole No.	h	d1	d2	t	a1	l1	d3	f_p(2)	F_p(3)	Order Code *
4	13.33335	506.67	14.5	38	41	39	35	3	62.5	125	4	12	10	15	9	33.3	433	7.7	0.018	0.068	0408R050C10
4	13.33335	1000	14.5	75	41	39	35	3	62.5	125	8	12	10	15	9	33.3	933.4	7.7	0.019	0.078	0408R100C10
4	13.33335	1000	14.5	75	41	39	35	3	62.5	125	8	12	14	20	13	33.3	933.4	11.7	0.019	0.078	0408R100CS0
4	13.33335	1253.34	14.5	94	41	39	35	3	62.5	125	10	12	10	15	9	33.3	1186.7	7.7	0.019	0.078	0408R125C10
4	13.33335	1506.67	14.5	113	41	39	35	3	62.5	125	12	12	10	15	9	33.3	1433.4	7.7	0.019	0.078	0408R150C10
4	13.33335	1506.67	14.5	113	41	39	35	3	62.5	125	12	12	14	20	13	33.3	1433.4	11.7	0.019	0.078	0408R150CS0
4	13.33335	1760	14.5	132	41	39	35	3	62.5	125	14	12	10	15	9	33.3	1693.4	7.7	0.019	0.078	0408R175C10
4	13.33335	2000	14.5	150	41	39	35	3	62.5	125	16	12	10	15	9	33.3	1933.4	7.7	0.021	0.088	0408R200C10
4	13.33335	2000	14.5	150	41	39	35	3	62.5	125	16	12	14	20	13	33.3	1933.4	11.7	0.021	0.088	0408R200CS0
5	16.66669	500	17.7	30	50	39	34	3	62.5	125	4	12	14	20	13	37.5	425	11.7	0.018	0.068	0508R050C10
5	16.66669	1000	17.7	60	50	39	34	3	62.5	125	8	12	14	20	13	37.5	925	11.7	0.019	0.078	0508R100C10
5	16.66669	1250	17.7	75	50	39	34	3	62.5	125	10	12	14	20	13	37.5	1175	11.7	0.019	0.078	0508R125C10
5	16.66669	1500	17.7	90	50	39	34	3	62.5	125	12	12	14	20	13	37.5	1425	11.7	0.019	0.078	0508R150C10
5	16.66669	1750	17.7	105	50	39	34	3	62.5	125	14	12	14	20	13	37.5	1675	11.7	0.019	0.078	0508R175C10
5	16.66669	2000	17.7	120	50	39	34	3	62.5	125	16	12	14	20	13	37.5	1925	11.7	0.021	0.088	0508R200C10
6	20.00003	500	21.3	25	60	49	43	3	62.5	125	4	16	18	26	17	37.5	425	15.7	0.018	0.068	0608R050C10
6	20.00003	1000	21.3	50	60	49	43	3	62.5	125	8	16	18	26	17	37.5	925	15.7	0.019	0.078	0608R100C10
6	20.00003	1260	21.3	63	60	49	43	3	62.5	125	10	16	18	26	17	37.5	1185	15.7	0.019	0.078	0608R125C10
6	20.00003	1500	21.3	75	60	49	43	3	62.5	125	12	16	18	26	17	37.5	1425	15.7	0.019	0.078	0608R150C10
6	20.00003	1760	21.3	88	60	49	43	3	62.5	125	14	16	18	26	17	37.5	1685	15.7	0.019	0.078	0608R175C10
6	20.00003	2000	21.3	100	60	49	43	3	62.5	125	16	16	18	26	17	37.5	1925	15.7	0.021	0.088	0608R200C10
8	26.66671	480	28.7	18	81	79	71	3	60	120	4	25	22	33	21	120	240	19.7	0.021	0.073	0808R050C10
8	26.66671	960	28.7	36	81	79	71	3	60	120	8	25	22	33	21	120	720	19.7	0.022	0.084	0808R100C10
8	26.66671	1200	28.7	45	81	79	71	3	60	120	10	25	22	33	21	120	960	19.7	0.022	0.084	0808R125C10
8	26.66671	1440	28.7	54	81	79	71	3	60	120	12	25	22	33	21	120	1200	19.7	0.022	0.084	0808R150C10
8	26.66671	1680	28.7	63	81	79	71	3	60	120	14	25	22	33	21	120	1440	19.7	0.022	0.084	0808R175C10
8	26.66671	1920	28.7	72	81	79	71	3	60	120	16	25	22	33	21	120	1680	19.7	0.024	0.095	0808R200C10
10	33.33339	1000	35.5	30	100	99	89	3	62.5	125	8	32	33	48	32	125	750	19.7	0.022	0.084	1008R100C10
12	40.00006	1000	42.6	25	120	120	108	3	40	125	8	40	39	58	38	102.5	750	19.7	0.026	0.09	1208R100C10

(1) Teeth Pitch Pt = Module x π / cos (19°31'42") (2) fp ＝Single Pitch Error (3) Fp＝Total Pitch Error

∗ For all models APEX also provides Rack without screw-holes. By ordering please change the 2nd last order-code position from "1" to "0". Please also refer to page 14.

∗∗ Basing on the nominal length 1000 mm.

Rack with Helical Teeth

Quality 10 / Carbon Steel
Tooth Thickness Tolerance : -90 ~ 0 μm ∗∗
Right-Hand Helical Teeth
Teeth Milled and Induction Hardened
All Sides Milled

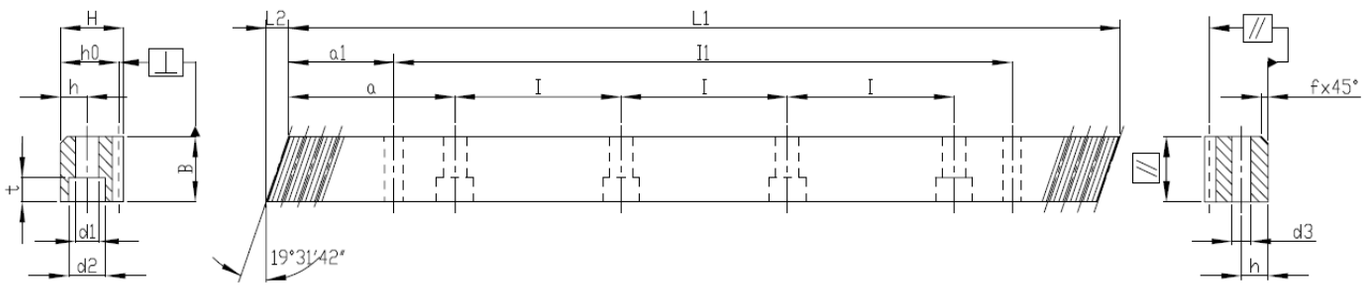

Mn	P_t(1)	L1	L2	Teeth No.	B	H	ho	f	a	l	Hole No.	h	d1	d2	t	a1	l1	d3	f_p(2)	F_p(3)	Order Code *
1.5	5.00001	500	6	100	17	17	15.5	2	62.5	125	4	6	6	10	6	31.7	436.6	5.7	0.034	0.128	1J10R050C10
1.5	5.00001	1000	6	200	17	17	15.5	2	62.5	125	8	6	6	10	6	31.7	936.6	5.7	0.037	0.148	1J10R100C10
1.5	5.00001	1250	6	250	17	17	15.5	2	62.5	125	10	6	6	10	6	31.7	1186.6	5.7	0.037	0.148	1J10R125C10
1.5	5.00001	1500	6	300	17	17	15.5	2	62.5	125	12	6	6	10	6	31.7	1436.6	5.7	0.037	0.148	1J10R150C10
1.5	5.00001	1750	6	350	17	17	15.5	2	62.5	125	14	6	6	10	6	31.7	1686.6	5.7	0.037	0.148	1J10R175C10
1.5	5.00001	2000	6	400	17	17	15.5	2	62.5	125	16	6	6	10	6	31.7	1936.6	5.7	0.041	0.167	1J10R200C10
2	6.66668	500	9.2	75	26	24	22	2	62.5	125	4	8	7	11	7	31.7	436.6	5.7	0.034	0.128	0210R050C10
2	6.66668	1000	9.2	150	26	24	22	2	62.5	125	8	8	7	11	7	31.7	936.6	5.7	0.037	0.148	0210R100C10
2	6.66668	1246.67	9.2	187	26	24	22	2	62.5	125	10	8	7	11	7	31.7	1183.3	5.7	0.037	0.148	0210R125C10
2	6.66668	1500	9.2	225	26	24	22	2	62.5	125	12	8	7	11	7	31.7	1436.6	5.7	0.037	0.148	0210R150C10
2	6.66668	1746.67	9.2	262	26	24	22	2	62.5	125	14	8	7	11	7	31.7	1683.3	5.7	0.037	0.148	0210R175C10
2	6.66668	2000	9.2	300	26	24	22	2	62.5	125	16	8	7	11	7	31.7	1936.6	5.7	0.041	0.167	0210R200C10
2.5	8.33335	500	10.6	60	30	29	26.5	2	62.5	125	4	9	10	15	9	35	430	7.7	0.036	0.139	2J10R050C10
2.5	8.33335	1000	10.6	120	30	29	26.5	2	62.5	125	8	9	10	15	9	35	930	7.7	0.039	0.16	2J10R100C10
2.5	8.33335	1250	10.6	150	30	29	26.5	2	62.5	125	10	9	10	15	9	35	1180	7.7	0.039	0.16	2J10R125C10
2.5	8.33335	1500	10.6	180	30	29	26.5	2	62.5	125	12	9	10	15	9	35	1430	7.7	0.039	0.16	2J10R150C10
2.5	8.33335	1750	10.6	210	30	29	26.5	2	62.5	125	14	9	10	15	9	35	1680	7.7	0.039	0.16	2J10R175C10
2.5	8.33335	2000	10.6	240	30	29	26.5	2	62.5	125	16	9	10	15	9	35	1930	7.7	0.043	0.181	2J10R200C10
3	10.00002	500	11	50	31	29	26	2	62.5	125	4	9	10	15	9	35	430	7.7	0.036	0.14	0310R050C10
3	10.00002	1000	11	100	31	29	26	2	62.5	125	8	9	10	15	9	35	930	7.7	0.039	0.162	0310R100C10
3	10.00002	1250	11	125	31	29	26	2	62.5	125	10	9	10	15	9	35	1180	7.7	0.039	0.162	0310R125C10
3	10.00002	1500	11	150	31	29	26	2	62.5	125	12	9	10	15	9	35	1430	7.7	0.039	0.162	0310R150C10
3	10.00002	1750	11	175	31	29	26	2	62.5	125	14	9	10	15	9	35	1680	7.7	0.039	0.162	0310R175C10
3	10.00002	2000	11	200	31	29	26	2	62.5	125	16	9	10	15	9	35	1930	7.7	0.043	0.182	0310R200C10

(1) Teeth Pitch Pt = Module x π / cos (19°31'42") (2) fp ＝Single Pitch Error (3) Fp＝Total Pitch Error

∗ For all models APEX also provides Rack without screw-holes. By ordering please change the 2nd last order-code position from "1" to "0". Please also refer to page 14.

∗∗ Basing on the nominal length 1000 mm.

Quality 10 / Carbon Steel

Tooth Thickness Tolerance : -90 ~ 0 μm ∗∗
Right-Hand Helical Teeth
Teeth Milled and Induction Hardened
All Sides Milled

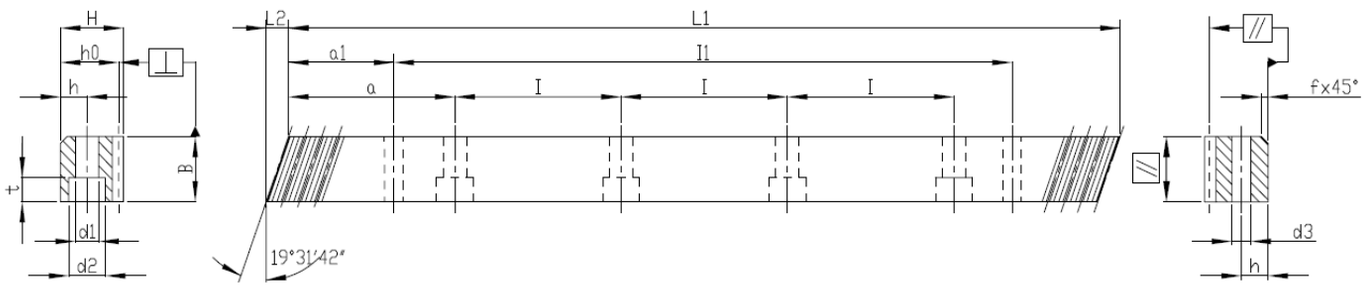

Mn	P_t(1)	L1	L2	Teeth No.	B	H	ho	f	a	l	Hole No.	h	d1	d2	t	a1	l1	d3	f_p(2)	F_p(3)	Order Code *
4	13.33335	506.67	14.5	38	41	39	35	3	62.5	125	4	12	10	15	9	33.3	433	7.7	0.04	0.151	0410R050C10
4	13.33335	1000	14.5	75	41	39	35	3	62.5	125	8	12	10	15	9	33.3	933.4	7.7	0.043	0.175	0410R100C10
4	13.33335	1000	14.5	75	41	39	35	3	62.5	125	8	12	14	20	13	33.3	933.4	11.7	0.043	0.175	0410R100CS0
4	13.33335	1253.34	14.5	94	41	39	35	3	62.5	125	10	12	10	15	9	33.3	1186.7	7.7	0.043	0.175	0410R125C10
4	13.33335	1506.67	14.5	113	41	39	35	3	62.5	125	12	12	10	15	9	33.3	1433.4	7.7	0.043	0.175	0410R150C10
4	13.33335	1506.67	14.5	113	41	39	35	3	62.5	125	12	12	14	20	13	33.3	1433.4	11.7	0.043	0.175	0410R150CS0
4	13.33335	1760	14.5	132	41	39	35	3	62.5	125	14	12	10	15	9	33.3	1693.4	7.7	0.043	0.175	0410R175C10
4	13.33335	2000	14.5	150	41	39	35	3	62.5	125	16	12	10	15	9	33.3	1933.4	7.7	0.047	0.197	0410R200C10
4	13.33335	2000	14.5	150	41	39	35	3	62.5	125	16	12	14	20	13	33.3	1933.4	11.7	0.047	0.197	0410R200CS0
5	16.66669	500	17.7	30	50	39	34	3	62.5	125	4	12	14	20	13	37.5	425	11.7	0.04	0.151	0510R050C10
5	16.66669	1000	17.7	60	50	39	34	3	62.5	125	8	12	14	20	13	37.5	925	11.7	0.043	0.175	0510R100C10
5	16.66669	1250	17.7	75	50	39	34	3	62.5	125	10	12	14	20	13	37.5	1175	11.7	0.043	0.175	0510R125C10
5	16.66669	1500	17.7	90	50	39	34	3	62.5	125	12	12	14	20	13	37.5	1425	11.7	0.043	0.175	0510R150C10
5	16.66669	1750	17.7	105	50	39	34	3	62.5	125	14	12	14	20	13	37.5	1675	11.7	0.043	0.175	0510R175C10
5	16.66669	2000	17.7	120	50	39	34	3	62.5	125	16	12	14	20	13	37.5	1925	11.7	0.047	0.197	0510R200C10
6	20.00003	500	21.3	25	60	49	43	3	62.5	125	4	16	18	26	17	37.5	425	15.7	0.04	0.151	0610R050C10
6	20.00003	1000	21.3	50	60	49	43	3	62.5	125	8	16	18	26	17	37.5	925	15.7	0.043	0.175	0610R100C10
6	20.00003	1260	21.3	63	60	49	43	3	62.5	125	10	16	18	26	17	37.5	1185	15.7	0.043	0.175	0610R125C10
6	20.00003	1500	21.3	75	60	49	43	3	62.5	125	12	16	18	26	17	37.5	1425	15.7	0.043	0.175	0610R150C10
6	20.00003	1760	21.3	88	60	49	43	3	62.5	125	14	16	18	26	17	37.5	1685	15.7	0.043	0.175	0610R175C10
6	20.00003	2000	21.3	100	60	49	43	3	62.5	125	16	16	18	26	17	37.5	1925	15.7	0.047	0.197	0610R200C10
8	26.66671	480	28.7	18	81	79	71	3	60	120	4	25	22	33	21	120	240	19.7	0.046	0.163	0810R050C10
8	26.66671	960	28.7	36	81	79	71	3	60	120	8	25	22	33	21	120	720	19.7	0.049	0.188	0810R100C10
8	26.66671	1200	28.7	45	81	79	71	3	60	120	10	25	22	33	21	120	960	19.7	0.049	0.188	0810R125C10
8	26.66671	1440	28.7	54	81	79	71	3	60	120	12	25	22	33	21	120	1200	19.7	0.049	0.188	0810R150C10
8	26.66671	1680	28.7	63	81	79	71	3	60	120	14	25	22	33	21	120	1440	19.7	0.049	0.188	0810R175C10
8	26.66671	1920	28.7	72	81	79	71	3	60	120	16	25	22	33	21	120	1680	19.7	0.053	0.212	0810R200C10
10	33.33339	1000	35.5	30	100	99	89	3	62.5	125	8	32	33	48	32	125	750	19.7	0.049	0.188	1010R100C10
12	40.00006	1000	42.6	25	120	120	108	3	40	125	8	40	39	58	38	102.5	750	19.7	0.059	0.202	1210R100C10

(1) Teeth Pitch Pt = Module x π / cos (19°31'42") (2) fp ＝Single Pitch Error (3) Fp＝Total Pitch Error

∗ For all models APEX also provides Rack without screw-holes. By ordering please change the 2nd last order-code position from "1" to "0". Please also refer to page 14.

∗∗ Basing on the nominal length 1000 mm.

Rack with Helical Teeth

(with Linear-Guide Interface, 90° Type)

Quality 6 / Carbon Steel

Tooth Thickness Tolerance : -22 ~ 0 μm
Right-Hand Helical Teeth
Teeth Induction Hardened and Ground
All Sides Ground

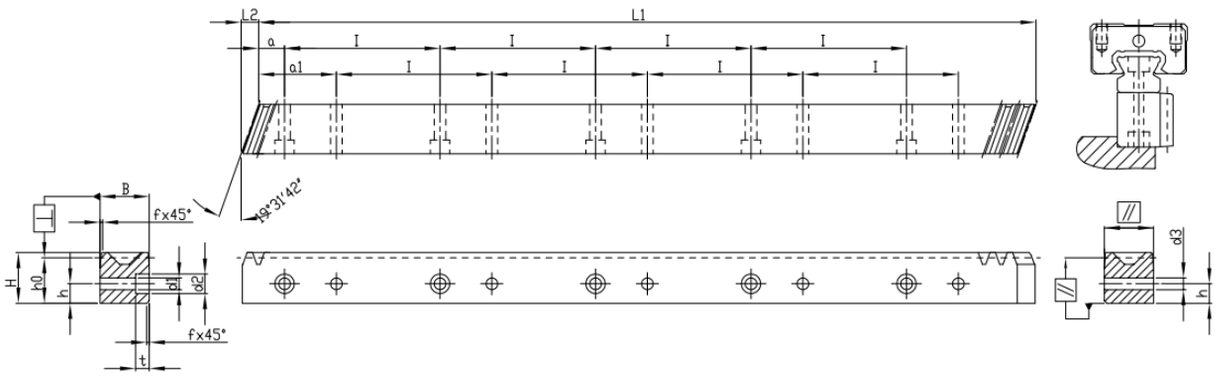

Mn	P_t(1)	L1	L2	Teeth No.	B	H	ho	f	a	l	Hole No.	h	D1	d2	t	a1	d3	f_p(2)	F_p(3)	Order Code
2	6.66668	480	6.7	72	19	19.50	17.50	1	10	60	8	7.5	4.5	7.5	5.3	30	4.5	0.008	0.029	0206R050C10A1
2	6.66668	960	6.7	144	19	19.50	17.50	1	10	60	16	7.5	4.5	7.5	5.3	30	4.5	0.008	0.034	0206R100C10A1
2	6.66668	480	8.5	72	24	24.50	22.50	1	10	60	8	10.0	6.0	9.5	8.5	30	6.0	0.008	0.029	0206R050CS0A1
2	6.66668	960	8.5	144	24	24.50	22.50	1	10	60	16	10.0	6.0	9.5	8.5	30	6.0	0.008	0.034	0206R100CS0A1
3	10.00002	480	10.3	48	29	29.75	26.75	2	10	60	8	11.5	7.0	11.0	9.0	30	7.0	0.008	0.032	0306R050C10A1
3	10.00002	960	10.3	96	29	29.75	26.75	2	10	60	16	11.5	7.0	11.0	9.0	30	7.0	0.009	0.037	0306R100C10A1
4	13.33335	480	13.8	36	39	39.75	35.75	2	20	80	6	14.0	10.0	15.0	9.0	40	10.0	0.009	0.034	0406R050C10A1
4	13.33335	960	13.8	72	39	39.75	35.75	2	20	80	12	14.0	10.0	15.0	9.0	40	10.0	0.010	0.040	0406R100C10A1
4	13.33335	480	13.8	36	39	48.75	44.75	2	20	80	6	17.0	10.0	15.0	9.0	40	10.0	0.009	0.034	0406R050CS0A1
4	13.33335	960	13.8	72	39	48.75	44.75	2	20	80	12	17.0	10.0	15.0	9.0	40	10.0	0.010	0.040	0406R100CS0A1
4	13.33335	840	17.4	63	49	58.00	54.00	2	30	105	8	22.5	14.0	20.0	13.0	60	14.0	0.009	0.034	0406R084CS0A1

Quality 8 / Carbon Steel

Tooth Thickness Tolerance : -48 ~ 0μm ＊＊
Right-Hand Helical Teeth
Material Normalized
Teeth Milled and all Sides Milled

Mn	P_t(1)	L1	L2	Teeth No.	B	H	ho	f	a	l	Hole No.	h	d1	d2	t	a1	d3	f_p(2)	F_p(3)	Order Code
2	6.66668	1920	7.1	288	20	19.50	17.50	1	10	60	32	7.5	4.5	7.5	5.3	30	4.5	0.018	0.074	0208R200C10A1
2	6.66668	1920	8.9	288	25	24.50	22.50	1	10	60	32	10.0	6	9.5	8.5	30	6.0	0.018	0.074	0208R200CS0A1
3	10.00002	1920	10.6	192	30	29.75	26.75	2	10	60	32	11.5	7	11.0	9.0	30	7.0	0.019	0.081	0308R200C10A1
4	13.33335	1920	14.2	144	40	39.75	35.75	2	20	80	24	14.0	10	15.0	9.0	40	10.0	0.021	0.088	0408R200C10A1
4	13.33335	1920	14.5	144	41	48.75	44.75	2	20	80	24	17.0	10	15.0	9.0	40	10.0	0.021	0.088	0408R200CS0A1

(1) Teeth Pitch Pt = Module x π / cos (19°31'42") (2) fp ＝Single Pitch Error (3) Fp＝Total Pitch Error
＊＊ Basing on the nominal length 1000 mm.

Rack with Helical Teeth

(with Linear-Guide Interface, 180° Type)

Quality 6 / Carbon Steel

Tooth Thickness Tolerance : -22 ~ 0 μm
Right-Hand Helical Teeth
Teeth Induction Hardened and Ground
All Sides Ground

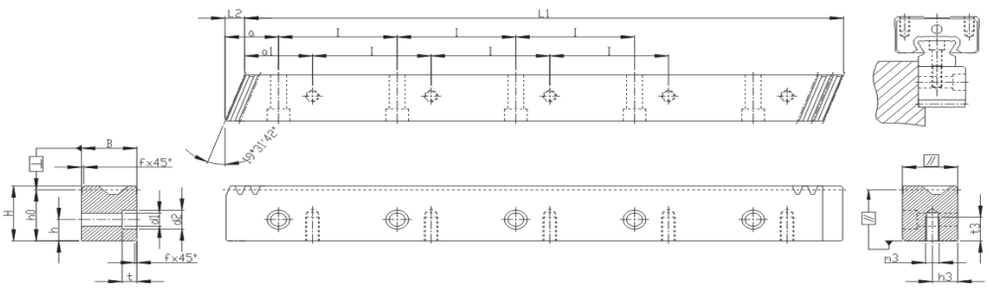

Mn	$P_t^{(1)}$	L1	L2	Teeth No.	B	H	ho	f	a	l	Hole No.	h	d1	d2	t	a1	m3	h3	t3	$f_p^{(2)}$	$F_p^{(3)}$	Order Code
2	6.66668	960	6.7	144	19	19.50	17.50	1	10	60	16	7.5	6	9.5	6	30	M4	7.5	8.0	0.008	0.034	0206R100C10A2
2	6.66668	960	8.5	144	24	24.50	22.50	1	10	60	16	10.0	7	11.0	7	30	M5	10.0	11.0	0.008	0.034	0206R100CS0A2
3	10.00002	960	10.3	96	29	29.75	26.75	2	10	60	16	11.5	10	15.0	9	30	M6	11.5	13.5	0.009	0.037	0306R100C10A2
4	13.33335	960	13.8	72	39	39.75	35.75	2	20	80	12	14.0	12	18.0	12	40	M8	14.0	16.0	0.010	0.040	0406R100C10A2
4	13.33335	960	13.8	72	39	48.75	44.75	2	20	80	12	17.0	12	18.0	12	40	M8	17.0	16.0	0.010	0.040	0406R100CS0A2
4	13.33335	840	17.4	63	49	58.00	54.00	2	30	105	8	22.5	14	20.0	13	60	M12	22.5	25.0	0.009	0.034	0406R084CS0A2

Quality 8 / Carbon Steel

Tooth Thickness Tolerance : -48 ~ 0μm ∗∗
Right-Hand Helical Teeth
Material Normalized
Teeth Milled and all Sides Milled

Mn	$P_t^{(1)}$	L1	L2	Teeth No.	B	H	ho	f	a	l	Hole No.	h	d1	d2	t	a1	m3	h3	T3	$f_p^{(2)}$	$F_p^{(3)}$	Order Code
2	6.66668	1920	7.1	288	20	19.50	17.50	1	10	60	32	7.5	6	9.5	6	30	M4	7.5	8.0	0.018	0.074	0208R200C10A2
2	6.66668	1920	8.9	288	25	24.50	22.50	1	10	60	32	10.0	7	11.0	7	30	M5	10.0	11.0	0.018	0.074	0208R200CS0A2
3	10.00002	1920	10.6	192	30	29.75	26.75	2	10	60	32	11.5	10	15.0	9	30	M6	11.5	13.5	0.019	0.081	0308R200C10A2
4	13.33335	1920	14.2	144	40	39.75	35.75	2	20	80	24	14.0	12	18.0	12	40	M8	14.0	16.0	0.021	0.088	0408R200C10A2

(1) Teeth Pitch Pt = Module x π / cos (19°31'42") (2) fp ＝Single Pitch Error (3) Fp＝Total Pitch Error
∗∗ Basing on the nominal length 1000 mm.

APEX Pinion Series

A : Curvic Plate / Page 34

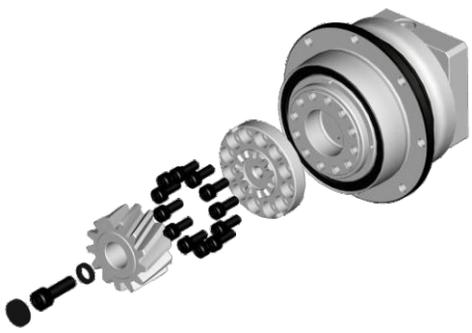

B : Welded Plate / Page 39

C : Teeth Plate / Page 45

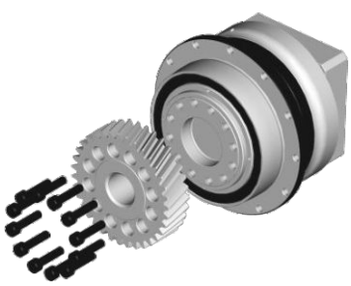

C : Teeth Plate with Flange / Page 46

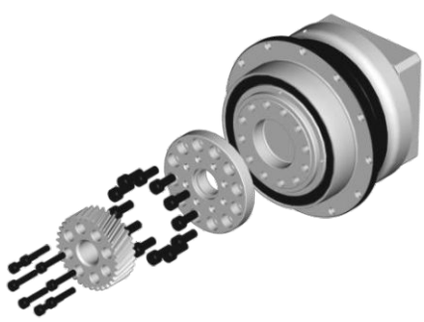

D : DIN 5480 / Page 50

E : Keyway w/o Shrink-Disc / Page 52
F : Keyway w. or w/o Shrink-Disc / Page 54

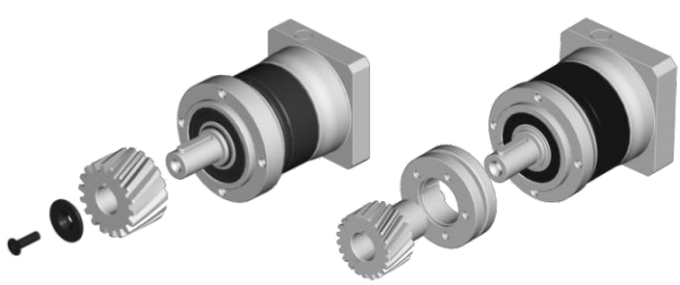

G : Long Shaft w. Keyway / Page 61

H : Long Shaft without Keyway / Page 63

APEX Pinion Curvic Plate

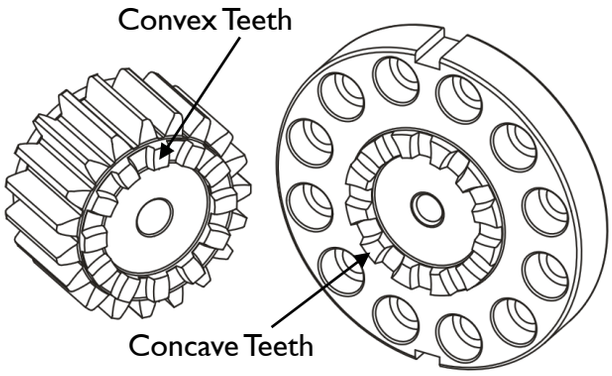

Advantages of Curvic Coupling

- All-Teeth-Coupling between pinion and gearbox
  - → Zero backlash
  - → Automatic concentricity
  - → High torque transmission
- The Round-Out of the gearbox-pinion-set can be adjusted by switching the curvic positions.
- Quick assembly and disassembly or replacement
- More suitable pinion teeth-no. can be chosen, without interference with screwing.

Step 1.

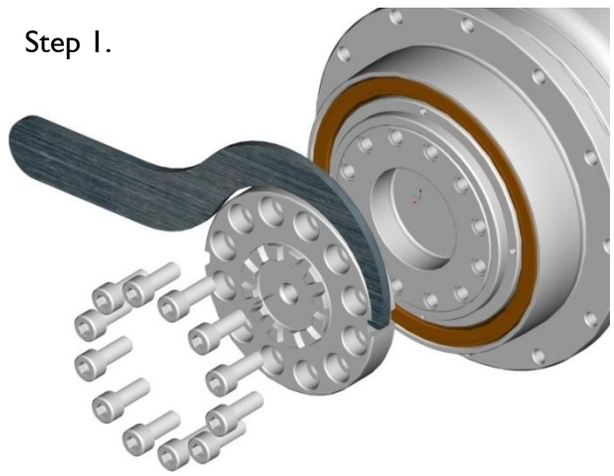

Step 2.

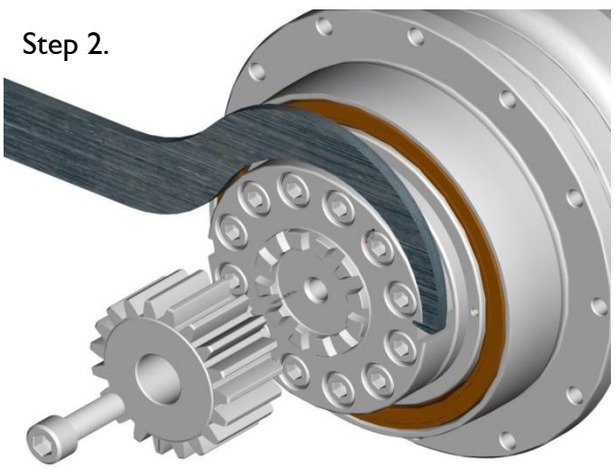

Pinion Order Code

Example : A 02 L 14 B 031

A	02	L	14	B	031

031

PCD of Screw Holes or
DIN 5480 Teeth No. or
Internal Diameter

B

Sub-Series according to Fig.
A = Fig. A
B = Fig. B
C = Fig. C

14

Pinion Teeth No.

L

Teeth Angle
L = Left-Hand Helical 19°31'42"
1* = Straight

02

Module-No.
1 ~ 12
The non-integer module no. will be given in alphabet.

A

Series
A = Curvic Plate
B = Welded Plate
C = Teeth Plate
D = DIN 5480
E , F = Keyway
G = Long Shaft w. KW
H = Long Shaft w/o KW

* 1 = " one "

Pinion with Helical Teeth

(Interface : Curvic Plate / EN ISO 9409-1-A)

Quality DIN 4 / Alloy Steel
Tooth Thickness Tolerance : e24
Left-Hand Helical Teeth
Case-Hardened and Teeth Ground

Bolt Circle Ø31.5

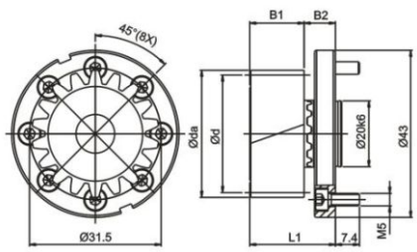

Fig. B

Mn.	z(1)	x(2)	da(3)	d(4)	dw(5)	B1	B2	L1	L(6)	Dl(7)	Locking screw for pinion	Fig	Order Code	
													Set	Pinion only
2	17	0.441	41.84	36.075	37.84	26	15	41	113.333	21	M8	B	A02L17B031	A02L17

Bolt Circle Ø50

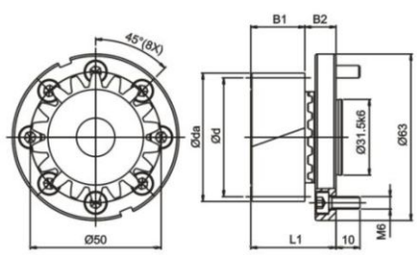

Fig. B

Mn.	z(1)	x(2)	da(3)	d(4)	dw(5)	B1	B2	L1	L(6)	Dl(7)	Locking screw for pinion	Fig	Order Code	
													Set	Pinion only
2	20	0.390	48.00	42.441	44.00	26	15	41	113.334	36	M10	B	A02L20B050	A02L20
3	17	0.441	62.76	54.113	56.76	31	15	46	170.000	36	M10	B	A03L17B050	A03L17

Bolt Circle Ø63

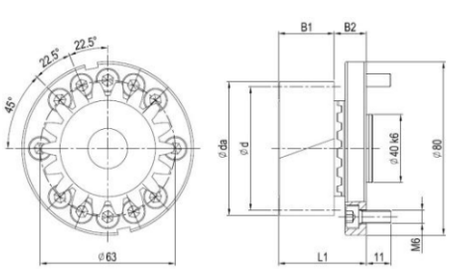

Fig. A

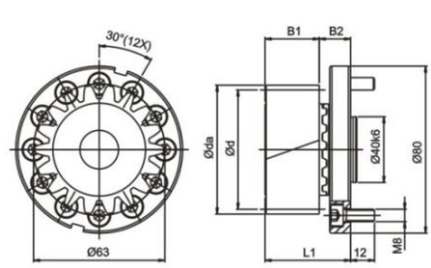

Fig. C

Mn.	z(1)	x(2)	da(3)	d(4)	dw(5)	B1	B2	L1	L(6)	Dl(7)	Locking screw for pinion	Fig	Order Code	
													Set	Pinion only
2	20	0.390	48	42.441	44	26	15.0	41.0	133.334	36	M10	A	A02L20A063	A02L20
							15	45.5				C	A02L20C063	
3	20	0.390	72	63.662	66	31	15.0	46.0	200.000	46	M12	A	A03L20A063	A03L20
							19.5	50.5				C	A03L20C063	

(1) Number of teeth (2) Profile modification factor (3) Diameter of addendum circle (4) Pitch circle diameter
(5) Working pitch circle diameter (6) Pitch circle length L = π x d (7) Curvic specification

Quality DIN 4 / Alloy Steel
Tooth Thickness Tolerance : e24
Left-Hand Helical Teeth
Case-Hardened and Teeth Ground

Bolt Circle Ø80

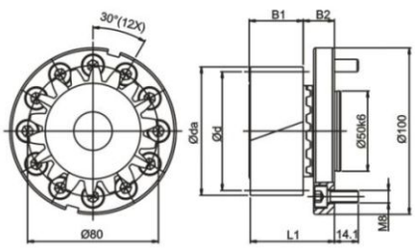

Fig. A

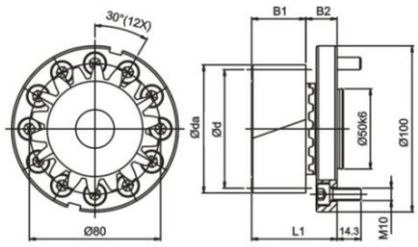

Fig. C

Mn.	z(1)	x(2)	da(3)	d(4)	dw(5)	B1	B2	L1	L(6)	D1(7)	Locking screw for pinion	Fig	Order Code	
													Set	Pinion only
3	18	0.118	64	57.296	58	31	21.5	52.5	180.000	46	M12	A	A03L18A080	A03L18
												C	A03L18C080	
	20	0.390	72	63.662	66	31	21.5	52.5	200.000	46	M12	A	A03L20A080	A03L20
												C	A03L20C080	
4	19	0.410	91.92	80.639	83.92	41	21.5	62.5	253.335	60	M16	A	A04L19A080	A04L19
												C	A04L19C080	

Bolt Circle Ø125

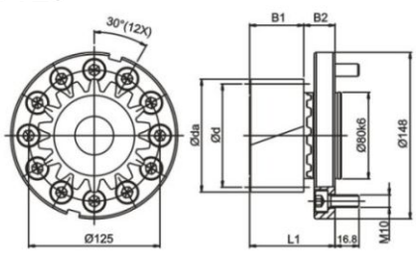

Fig. A

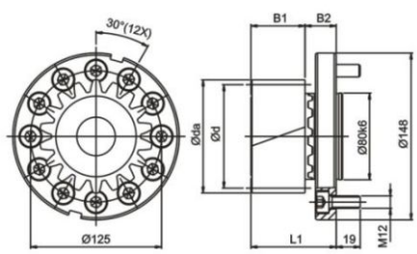

Fig. C

Mn.	z(1)	x(2)	da(3)	d(4)	dw(5)	B1	B2	L1	L(6)	D1(7)	Locking screw for pinion	Fig	Order Code	
													Set	Pinion only
4	18	0.638	89.5	76.394	81.5	41	29	70	240.000	68	M16	A	A04L18A125	A04L18
												C	A04L18C125	
	20	0.190	94.4	84.883	86.4	41	29	70	266.667	68	M16	A	A04L20A125	A04L20
												C	A04L20C125	
5	19	0.400	114.8	100.798	104.8	51	29	80	316.666	80	M20	A	A05L19A125	A05L19
												C	A05L19C125	

Bolt Circle Ø140 / Ø145

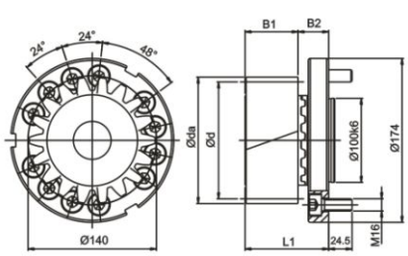

Fig. A

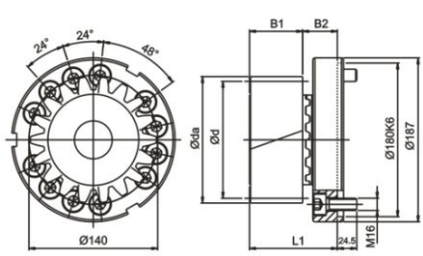

Fig. B

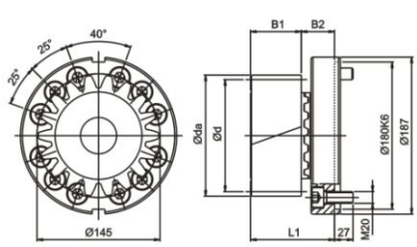

Fig. C

Mn.	z(1)	x(2)	da(3)	d(4)	dw(5)	B1	B2	L1	L(6)	D1(7)	Locking screw for pinion	Fig	Order Code	
													Set	Pinion only
5	18	0.251	108.0	95.493	98.0	51	38	89	300.000	80	M20	A	A05L18A140	A05L18
												B	A05L18B140	
												C	A05L18C145	
	19	0.400	114.8	100.798	104.8	51	38	89	316.667	80	M20	A	A05L19A140	A05L19
												B	A05L19B140	
												C	A05L19C145	
6	19	0.404	137.8	120.958	125.8	61	38	99	380.000	90	M24	A	A06L19A140	A06L19
												B	A06L19B140	
												C	A06L19C145	

Pinion with Helical Teeth

(Interface : Curvic Plate / EN ISO 9409-1-A)

Quality DIN 4 / Alloy Steel
Tooth Thickness Tolerance : e24
Left-Hand Helical Teeth
Case-Hardened and Teeth Ground

Bolt Circle Ø160 / Ø166

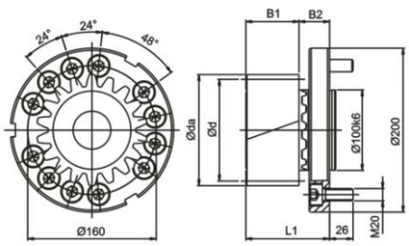

Fig. A

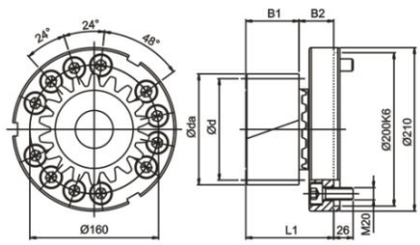

Fig. B

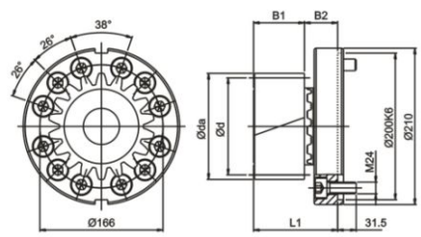

Fig. C

Mn.	z(1)	x(2)	da(3)	d(4)	dw(5)	B1	B2	L1	L(6)	D1(7)	Locking screw for pinion	Fig	Order Code	
													Set	Pinion only
6	18	0.201	129.00	114.592	117.0	61	49	110	360.000	90	M24	A	A06L18A160	A06L18
												B	A06L18B160	
												C	A06L18C166	
	19	0.404	137.80	120.958	125.8	61	49	110	380.000	90	M24	A	A06L19A160	A06L19
												B	A06L19B160	
												C	A06L19C166	
8	19	0.411	183.85	161.277	167.85	81	49	130	506.667	120	M30	A	A08L19A160	A08L19
												B	A08L19B160	
												C	A08L19C166	

Bolt Circle Ø200

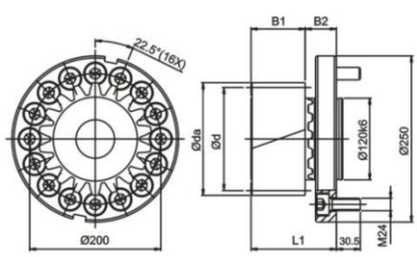

Mn.	z(1)	x(2)	da(3)	d(4)	dw(5)	B1	B2	L1	L(6)	D1(7)	Locking screw for pinion	Order Code	
												Set	Pinion only
8	15	0.355	149.00	127.324	133.00	81	50	131	400.000	108	M30	A08L15A200	A08L15
	19	0.411	183.85	161.277	167.85	81	50	131	506.667	120		A08L19A200	A08L19

(1) Number of teeth (2) Profile modification factor (3) Diameter of addendum circle (4) Pitch circle diameter
(5) Working pitch circle diameter (6) Pitch circle length L = π x d (7) Curvic specification

Quality DIN 4 / Alloy Steel
Tooth Thickness Tolerance : e24
Left-Hand Helical Teeth
Case-Hardened and Teeth Ground

Bolt Circle Ø250

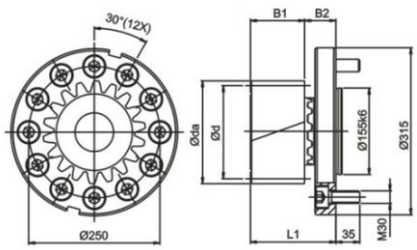

Mn.	z(1)	x(2)	da(3)	d(4)	dw(5)	B1	B2	L1	L(6)	D1(7)	Locking screw for pinion	Order Code	
												Set	Pinion only
10	14	0.523	179.0	148.545	159.0	101	62	163	466.667	132	M36	A10L14A250	A10L14
	18	0.426	219.5	190.986	199.5	101	62	163	600.000	132		A10L18A250	A10L18

(1) Number of teeth (2) Profile modification factor (3) Diameter of addendum circle (4) Pitch circle diameter
(5) Working pitch circle diameter (6) Pitch circle length L = π x d (7) Curvic specification

Note : The strength of screws is limits the max. transmission torque. Please refer to the table below.

PCD of Flange	Bolt / Screw Size	Max. Torque (Nm)
Ø31.5	M5	75
Ø50	M6	175
Ø63	M6	335
	M8	640
Ø80	M8	810
	M10	1320
Ø125	M10	2,055
	M12	3,060
Ø140	M16	6,620
Ø145	M20	10,885
Ø160	M20	12,000
Ø166	M24	18,160
Ø200	M24	29,170
Ø250	M30	44,320

Table of screw tightening torque

Screw	Screw tightening torque (Nm)
M5 x 0.8P	9.8
M6 x 1P	17
M8 x 1.25P	41
M10 x 1.5P	80
M12 x 1.75P	139
M16 x 2P	343
M20 x 2.5P	692
M24 x 3P	1,190
M30 x 3.5P	2,380
M36 x 4P	4,136

Pinion material carburized, surface hardness reached 60 HRC. Teeth surface ground to reduce noise and improve wear resistance. Accessories include hexagon socket head cap screws (Strength 12.9 , DIN 912)

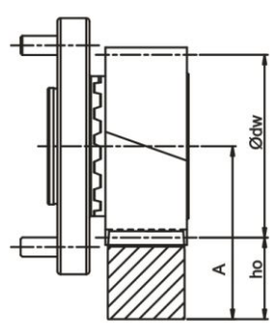

$$A = ho + \frac{\phi\, dw}{2}$$

In Table 1, the maximum permissible torque of the pinion Curvic Plate and the rack is calculated on the basis of a speed of 1.5 m/s and providing good lubrication (using an automatic lubrication system or manually applied grease every day), the tooth root strength factor $S_F \geqq 1.4$, tooth surface strength coefficient $S_H \geqq 1$, the safety factor $S_B \fallingdotseq 1$, and the required service life of 20,000 hours. By higher speed, the max. permissible torque reduced. The user needs to increase the safety factor for the application.
Backlash changes by different center height. Please contact APEX under WWW.APEXDYNA.COM.

Pinion with Helical Teeth

(Interface : Curvic Plate / EN ISO 9409-1-A)

Table 1. The max. permitted torque and feed-force of pinion Curvic Plate

Pinion \ Rack			Quality	Q4	Q5	Q5+	Q6	Q6M	Q8H	Q8	Q9	Q10
			Material	Carbon Steel	Carbon Steel	Carbon Steel	Carbon Steel	Carbon Steel	Q&T Alloy Steel	Carbon Steel	Stainless Steel	Carbon Steel
			Heat Treatment	Induction Hardening	Induction Hardening	Induction Hardening	Induction Hardening	Induction Hardening	Quenched Tempered	Normalizing	Solution	Induction Hardening
Mn	z(1)	dw(5)	Max. Torque * and Feed-Force									
2	17	37.84	F_{2T}(8) (N)		8,870		8,870	8,870	3,326	1,940		4,158
			T_{2B}(9) (Nm)		160		160	160	60	35		75
	20	44	F_{2T}(8) (N)		8,482		8,247	8,247	2,356	1,649		4,006
			T_{2B}(9) (Nm)		180		175	175	50	35		85
3	17	56.76	F_{2T}(8) (N)		17,926	17,926	17,741	17,741	8,501	4,435		12,197
			T_{2B}(9) (Nm)		485	485	480	480	230	120		330
	18	58	F_{2T}(8) (N)		19,024	19,024	18,850	18,850	10,472	5,585		14,661
			T_{2B}(9) (Nm)		545	545	540	540	300	160		420
	20	66	F_{2T}(8) (N)		16,022	16,022	15,708	15,708	6,911	3,142		10,838
			T_{2B}(9) (Nm)		510	510	500	500	220	100		345
4	18	81.5	F_{2T}(8) (N)		30,761	30,761	30,761	30,761	18,719	9,948		21,206
			T_{2B}(9) (Nm)		1,175	1,175	1,175	1,175	715	380		810
	19	83.92	F_{2T}(8) (N)		32,247	32,247	32,119	32,119	21,950	11,905		22,818
			T_{2B}(9) (Nm)		1,300	1,300	1,295	1,295	885	480		920
	20	86.4	F_{2T}(8) (N)		29,452	29,452	29,452	29,452	15,669	7,893		21,324
			T_{2B}(9) (Nm)		1,250	1,250	1,250	1,250	665	335		905
5	18	98	F_{2T}(8) (N)	56,339	56,339	56,339	56,339	56,339		20,630		47,438
			T_{2B}(9) (Nm)	2,690	2,690	2,690	2,690	2,690		985		2,265
	19	104.8	F_{2T}(8) (N)	56,649	56,649	56,649	56,549	56,549		21,826		47,620
			T_{2B}(9) (Nm)	2,855	2,855	2,855	2,850	2,850		1,100		2,400
6	18	117	F_{2T}(8) (N)	77,580	77,580	77,580	77,580	77,580		33,947		67,544
			T_{2B}(9) (Nm)	4,445	4,445	4,445	4,445	4,445		1,945		3,870
	19	125.8	F_{2T}(8) (N)	73,662	73,662	73,662	73,662	73,662		35,136		63,741
			T_{2B}(9) (Nm)	4,455	4,455	4,455	4,455	4,455		2,125		3,855
8	15	133	F_{2T}(8) (N)	135,717	135,717		135,638	135,638		40,919		102,966
			T_{2B}(9) (Nm)	8,640	8,640		8,635	8,635		2,605		6,555
	19	167.85	F_{2T}(8) (N)	131,761	131,761		131,699	131,699		62,315		95,736
			T_{2B}(9) (Nm)	10,625	10,625		10,620	10,620		5,025		7,720
10	14	159	F_{2T}(8) (N)	189,707	189,707		189,707	189,707		62,877		153,691
			T_{2B}(9) (Nm)	14,090	14,090		14,090	14,090		4,670		11,415
	18	199.5	F_{2T}(8) (N)	204,308	204,308		204,256	204,256		100,636		166,766
			T_{2B}(9) (Nm)	19,510	19,510		19,505	19,505		9,610		15,925

* The Maximal Driving Torque is also to be understood as the Maximal Acceleration Torque T_{2B}.
The Emergency Stop Torque $T_{2NOT} = 2 \times T_{2B}$, under the condition limited 1000 times in the whole service period.

(1) Number of Teeth (5) Working Pitch Circle Diameter (in mm) (8) Maximum Feed-Force (9) Maximum Driving Torque

Pinion with Helical Teeth

(Interface : Welded Plate(★)/ EN ISO 9409-1-A)

Quality DIN 4 / Alloy Steel
Tooth Thickness Tolerance : e24
Left-Hand Helical Teeth
Case-Hardened and Teeth Ground

Bolt Circle Ø50

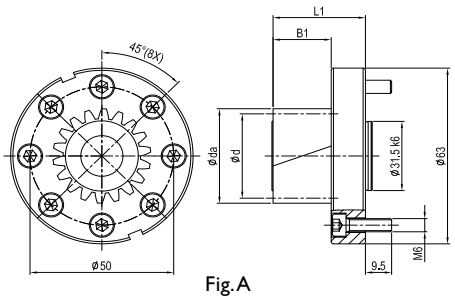

Fig. A

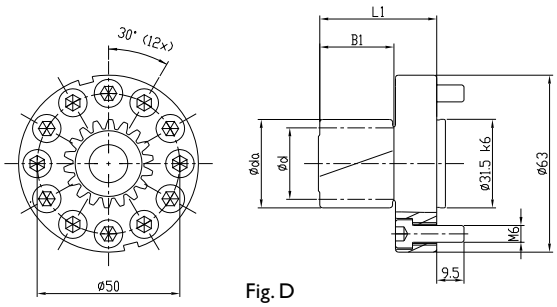

Fig. D

Mn.	z(1)	x(2)	da(3)	d(4)	dw(5)	B1	L1	L(6)	Fig	Order Code
2	12	0.50	31.465	25.465	27.465	26.0	41.0	80.000	A	B02L12A050
									D	B02L12D050
	16	0.0	37.953	33.953	33.953	26.0	41.0	106.667	A	B02L16A050
									D	B02L16D050

Bolt Circle Ø63

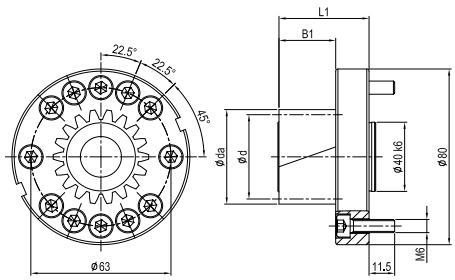

Fig. A

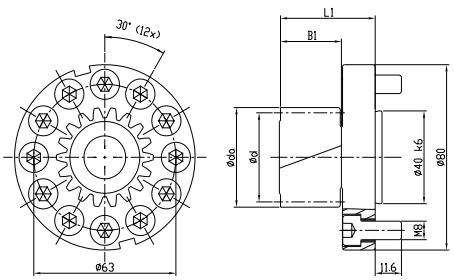

Fig. D

Mn.	z(1)	x(2)	da(3)	d(4)	dw(5)	B1	L1	L(6)	Fig	Order Code
2	12	0.50	31.465	25.465	27.465	26.0	41.0	80.000	A	B02L12A063
									D	B02L12D063
	17	0.0	40.075	36.075	36.075	26.0	41.0	113.333	A	B02L17A063
									D	B02L17D063
	19	0.0	44.319	40.319	40.319	26.0	41.0	126.667	A	B02L19A063
									D	B02L19D063
	23	0.0	52.808	48.808	48.808	26.0	41.0	153.334	A	B02L23A063
3	12	0.5	47.197	38.197	41.197	32.5	47.5	120.000	A	B03L12A063
									D	B03L12D063
	14	0.3	52.363	44.563	46.363	32.5	47.5	140.000	A	B03L14A063

(1) Number of teeth (2) Profile modification factor (3) Diameter of addendum circle (4) Pitch circle diameter
(5) Working pitch circle diameter (6) Pitch circle length L = π x d
★ Note: Not for German market !

Pinion with Helical Teeth

(Interface : Welded Plate(★)/ EN ISO 9409-1-A)

Quality DIN 4 / Alloy Steel
Tooth Thickness Tolerance : e24
Left-Hand Helical Teeth
Case-Hardened and Teeth Ground

Bolt Circle Ø80

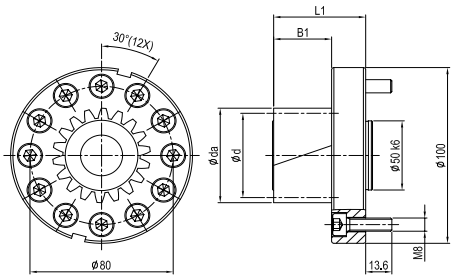

Fig. A

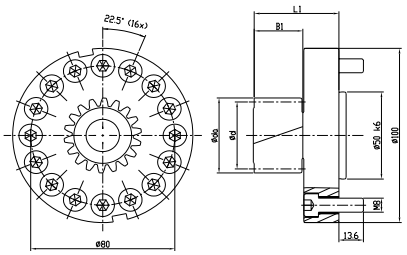

Fig. D

Mn.	z(1)	x(2)	da(3)	d(4)	dw(5)	B1	L1	L(6)	Fig	Order Code
2	12	0.50	31.465	25.465	27.465	26.0	46.0	80.000	A	B02L12A080
									D	B02L12D080
	23	0.0	52.808	48.808	48.808	26.0	46.0	153.334	A	B02L23A080
									D	B02L23D080
	29	0.0	65.540	61.540	61.540	26.0	46.0	193.334	A	B02L29A080
									D	B02L29D080
3	12	0.5	47.197	38.197	41.197	32.5	52.5	120.000	A	B03L12A080
									D	B03L12D080
	16	0.0	56.930	50.930	50.930	32.5	52.5	160.000	A	B03L16A080
									D	B03L16D080
	17	0.0	60.113	54.113	54.113	32.5	52.5	170.000	A	B03L17A080
									D	B03L17D080
	19	0.0	66.479	60.479	60.479	32.5	52.5	190.000	A	B03L19A080
									D	B03L19D080
4	12	0.5	62.930	50.930	54.930	45.0	65.0	160.000	A	B04L12A080
									D	B04L12D080

Bolt Circle Ø125

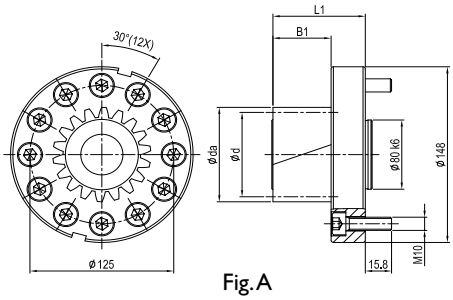

Fig. A

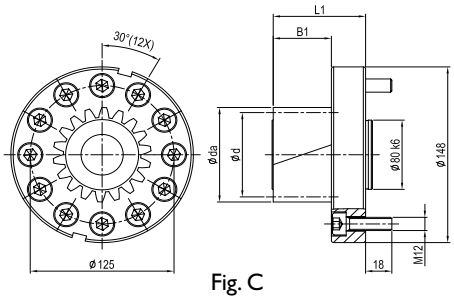

Fig. C

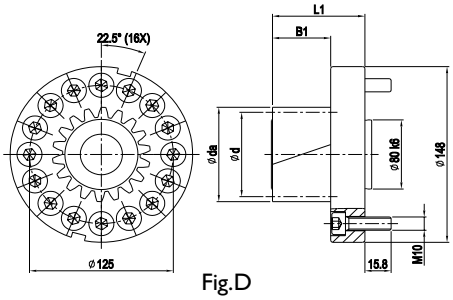

Fig. D

Mn.	z(1)	x(2)	da(3)	d(4)	dw(5)	B1	L1	L(6)	Fig	Order Code
3	12	0.50	47.197	38.197	41.197	32.5	57.5	120.000	A	B03L12A125
									C	B03L12C125
									D	B03L12D125
	19	0.00	66.479	60.479	60.479	32.5	57.5	190.000	A	B03L19A125
									C	B03L19C125
									D	B03L19D125

★ Note: Not for German market !

Pinion with Helical Teeth

(Interface : Welded Plate(★)/ EN ISO 9409-1-A)

Quality DIN 4 / Alloy Steel
Tooth Thickness Tolerance : e24
Left-Hand Helical Teeth
Case-Hardened and Teeth Ground

Bolt Circle Ø125

Mn.	z(1)	x(2)	da(3)	d(4)	dw(5)	B1	L1	L(6)	Fig	Order Code
3	25	0.00	85.578	79.578	79.578	32.5	57.5	250.000	A	B03L25A125
									D	B03L25D125
	26	0.00	88.761	82.761	82.761	32.5	57.5	260.000	A	B03L26A125
									C	B03L26C125
									D	B03L26D125
	32	0.00	107.859	101.859	101.859	32.5	57.5	320.000	A	B03L32A125
									D	B03L32D125
4	12	0.50	62.930	50.930	54.930	45.0	70.0	160.000	A	B04L12A125
									C	B04L12C125
									D	B04L12D125
	15	0.00	71.662	63.662	63.662	45.0	70.0	200.000	A	B04L15A125
									D	B04L15D125
	16	0.00	75.906	67.906	67.906	45.0	70.0	213.334	A	B04L16A125
									D	B04L16D125
	17	0.00	80.15	72.15	72.15	45.0	70.0	226.667	A	B04L17A125
									C	B04L17C125
									D	B04L17D125
	19 11	0.	80.519	80.639	81.519	45.0	70.0	253.334	A	B04L19A125
									C	B04L19C125
									D	B04L19D125
	20	0.00	92.883	84.883	84.883	45.0	70.0	266.667	A	B04L20A125
									C	B04L20C125
									D	B04L20D125
	23	0.00	105.615	97.615	97.615	45.0	70.0	306.667	A	B04L23A125
									D	B04L23D125
5	12	0.50	78.662	63.662	68.662	55.0	80.0	200.000	A	B05L12A125
									C	B05L12C125
									D	B05L12D125
	16	0.00	94.883	84.883	84.883	55.0	80.0	266.667	A	B05L16A125
									C	B05L16C125
									D	B05L16D125
	18	0.00	105.493	95.493	95.493	55.0	80.0	300.000	A	B05L18A125
									C	B05L18C125
									D	B05L18D125
6	12	0.50	94.394	76.394	82.394	65.0	90.0	240.000	A	B06L12A125
									C	B06L12C125
									D	B06L12D125
	13	0.50	100.761	82.761	88.761	65.0	90.0	260.000	A	B06L13A125
									D	B06L13D125
	15	0.00	105.493	95.493	95.493	65.0	90.0	300.000	A	B06L15A125
									D	B06L15D125

(1) Number of teeth (2) Profile modification factor (3) Diameter of addendum circle (4) Pitch circle diameter
(5) Working pitch circle diameter (6) Pitch circle length L = L = π x d
★ Note: Not for German market !

Pinion with Helical Teeth

(Interface : Welded Plate(★)/ EN ISO 9409-1-A)

Quality DIN 4 / Alloy Steel
Tooth Thickness Tolerance : e24
Left-Hand Helical Teeth
Case-Hardened and Teeth Ground

Bolt Circle Ø140 / Ø145

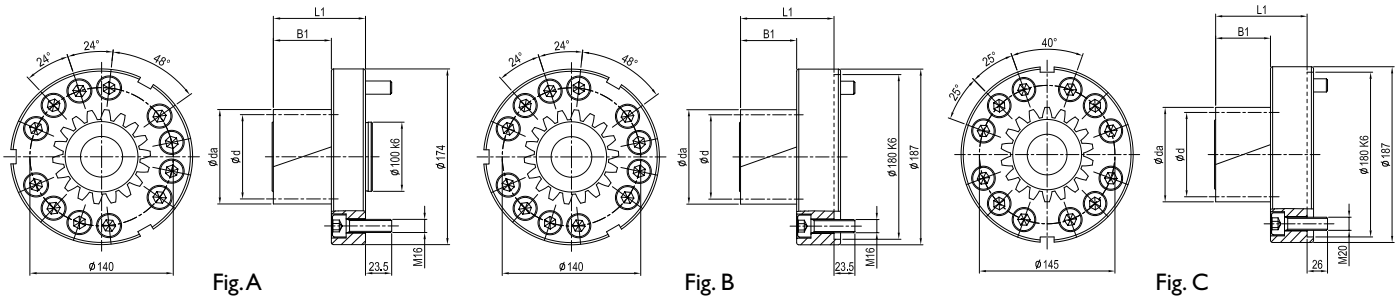

Fig. A Fig. B Fig. C

Mn.	z(1)	x(2)	da(3)	d(4)	dw(5)	B1	L1	L(6)	Fig	Order Code
4	12	0.50	62.930	50.930	54.930	45	79	160.000	A	B04L12A140
									B	B04L12B140
	19	0.11	89.519	80.639	81.519	45	79	253.334	A	B04L19A140
									B	B04L19B140
	20	0.00	92.883	84.883	84.883	45	79	266.667	A	B04L20A140
									B	B04L20B140
									C	B04L20C145
5	14	0.30	87.272	74.272	77.272	55	89	233.334	A	B05L14A140
									B	B05L14B140
	18	0.00	105.493	95.493	95.493	55	89	300.000	A	B05L18A140
									B	B05L18B140
	19	0.00	110.798	100.798	100.798	55	89	316.667	A	B05L19A140
									B	B05L19B140
6	12	0.50	94.394	76.394	82.394	65	99	240.000	A	B06L12A140
									B	B06L12B140
	15	0.00	107.493	95.493	95.493	65	99	300.000	A	B06L15A140
									B	B06L15B140
	16	0.00	113.859	101.859	101.859	65	99	320.000	A	B06L16A140
									B	B06L16B140

Bolt Circle Ø160

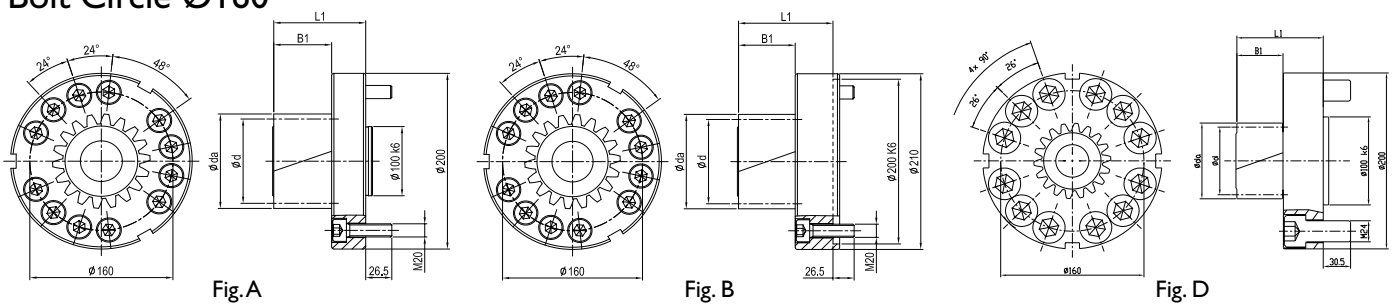

Fig. A Fig. B Fig. D

Mn.	z(1)	x(2)	da(3)	d(4)	dw(5)	B1	L1	L(6)	Fig	Order Code
5	12	0.5	78.662	63.662	68.662	55	100	200.000	A	B05L12A160
									B	B05L12B160
									D	B05L12D160
	19	0.0	110.798	100.798	100.798	55	100	316.667	A	B05L19A160
									B	B05L19B160
									D	B05L19D160
6	12	0.5	94.394	76.394	82.394	65	110	240.000	A	B06L12A160
									B	B06L12B160
									D	B06L12D160
	16	0.0	113.859	101.859	101.859	65	110	320.000	A	B06L16A160
									B	B06L16B160
									D	B06L16D160
8	12	0.5	125.859	101.859	109.859	85	130	320.000	A	B08L12A160
									B	B08L12B160

★ Note: Not for German market !

Pinion with Helical Teeth

(Interface : Welded Plate(★)/ EN ISO 9409-1-A)

Note: The strength of screws is limits the max. transmission torque.
Please refer to the table below for Pinion Welded Plate.

PCD of Flange	Bolt / Screw Size	Max. Torque (Nm)
Ø 50	M6 x 8PCS	175
	M6 x 12PCS	265
Ø 63	M6 x 12PCS	335
	M8 x 12PCS	640
Ø 80	M8 x 12PCS	810
	M8 x 16PCS	1,160
Ø 125	M10 x 12PCS	2,055
	M10 x 16PCS	2,745
	M12 x 12PCS	3,060
Ø 140	M16 x 12PCS	6,620
Ø 145	M20 x 12PCS	10,885
Ø 160	M20 x 12PCS	12,000
	M24 x 12PCS	18,160

Table of screw tightening torque.

Screw	Screw tightening torque (Nm)
M5 x 0.8P	9.8
M6 x 1P	17
M8 x 1.25P	41
M10 x 1.5P	80
M12 x 1.75P	139
M16 x 2P	343
M20 x 2.5P	692
M24 x 3P	1,190
M30 x 3.5P	2,380
M36 x 4P	4,136

Table 2. The max. permitted torque and feed-force of pinion Welded Plate

Pinion \ Rack			Quality	Q4	Q5	Q5+	Q6	Q6M	Q8H	Q8	Q9	Q10
			Material	Carbon Steel	Carbon Steel	Carbon Steel	Carbon Steel	Carbon Steel	Q&T Alloy Steel	Carbon Steel	Stainless Steel	Carbon Steel
			Heat Treatment	Induction Hardening	Induction Hardening	Induction Hardening	Induction Hardening	Induction Hardening	Quenched Tempered	Normalizing	Solution	Induction Hardening
Mn	z(1)	dw(5)	Max. Torque * and Feed-Force									
2	12	27.465	F_{2T}(8) (N)		6,676		6,283	6,283	1,571	1,178	-	2,356
			T_{2B}(9) (Nm)		85		80	80	20	15	-	30
	16	33.953	F_{2T}(8) (N)		9,425		9,425	9,425	3,240	1,767	-	5,596
			T_{2B}(9) (Nm)		160		160	160	55	30	-	95
	17	36.075	F_{2T}(8) (N)		9,425		9,425	9,425	3,881	1,663	-	5,544
			T_{2B}(9) (Nm)		170		170	170	70	30	-	100
	19	40.319	F_{2T}(8) (N)		9,673		9,673	9,673	4,960	2,480	-	5,704
			T_{2B}(9) (Nm)		195		195	195	100	50	-	115
	23	48.808	F_{2T}(8) (N)		9,015		8,810	8,810	3,893	2,049	-	4,507
			T_{2B}(9) (Nm)		220		215	215	95	50	-	110
	29	61.54	F_{2T}(8) (N)		9,100		8,937	8,937	6,012	2,925	-	4,225
			T_{2B}(9) (Nm)		280		275	275	185	90	-	130
3	12	41.197	F_{2T}(8) (N)		12,828	12,828	12,566	12,566	3,927	2,356	-	6,807
			T_{2B}(9) (Nm)		245	245	240	240	75	45	-	130
	14	46.363	F_{2T}(8) (N)		16,605	16,605	16,157	16,157	6,059	2,917	-	10,771
			T_{2B}(9) (Nm)		370	370	360	360	135	65	-	240
	16	50.93	F_{2T}(8) (N)		18,850	18,850	18,850	18,850	8,836	4,516	-	13,941
			T_{2B}(9) (Nm)		480	480	480	480	225	115	-	355
	17	54.113	F_{2T}(8) (N)		19,034	19,034	19,034	19,034	9,794	5,174	-	14,045
			T_{2B}(9) (Nm)		515	515	515	515	265	140	-	380
	19	60.479	F_{2T}(8) (N)		19,511	19,511	19,346	19,346	11,905	6,449	-	14,551
			T_{2B}(9) (Nm)		590	590	585	585	360	195	-	440
	25	79.578	F_{2T}(8) (N)		16,965	16,965	16,713	16,713	11,687	6,283	-	11,561
			T_{2B}(9) (Nm)		675	675	665	665	465	250	-	460
	26	82.761	F_{2T}(8) (N)		16,916	16,916	16,675	16,675	12,445	6,766	-	11,600
			T_{2B}(9) (Nm)		700	700	690	690	515	280	-	480
	32	101.859	F_{2T}(8) (N)		17,082	17,082	16,788	16,788	12,468	9,327	-	11,290
			T_{2B}(9) (Nm)		870	870	855	855	635	475	-	575

* The Maximal Driving Torque is also to be understood as the Maximal Acceleration Torque T_{2B}.
The Emergency Stop Torque $T_{2NOT} = 2 \times T_{2B}$, under the condition limited 1000 times in the whole service period.

(1) Number of Teeth (5) Working Pitch Circle Diameter (in mm) (8) Maximum Feed-Force (9) Maximum Driving Torque

★ Note: Not for German market !

Pinion with Helical Teeth

(Interface : Welded Plate(★)/ EN ISO 9409-1-A)

Table 2. The max. permitted torque and feed-force of pinion Welded Plate

Pinion \ Rack			Quality	Q4	Q5	Q5+	Q6	Q6M	Q8H	Q8	Q9	Q10
			Material	Carbon Steel	Carbon Steel	Carbon Steel	Carbon Steel	Carbon Steel	Q&T Alloy Steel	Carbon Steel	Stainless Steel	Carbon Steel
			Heat Treatment	Induction Hardening	Induction Hardening	Induction Hardening	Induction Hardening	Induction Hardening	Quenched Tempered	Normaliz-ing	Solution	Induction Hardening
Mn	z(1)	dw(5)	Max. Torque * and Feed-Force									
4	12	54.93	F_{2T}(8) (N)		22,187	22,187	21,991	21,991	9,032	3,927		12,174
			T_{2B}(9) (Nm)		565	565	560	560	230	100		310
	15	63.662	F_{2T}(8) (N)		33,772	33,772	33,772	33,772	16,336	8,482		25,290
			T_{2B}(9) (Nm)		1,075	1,075	1,075	1,075	520	270		805
	16	67.906	F_{2T}(8) (N)		33,870	33,870	33,870	33,870	18,260	9,719		25,182
			T_{2B}(9) (Nm)		1,150	1,150	1,150	1,150	620	330		855
	17	72.15	F_{2T}(8) (N)		35,897	35,897	35,897	35,897	20,236	10,949		28,551
			T_{2B}(9) (Nm)		1,295	1,295	1,295	1,295	730	395		1,030
	19	81.519	F_{2T}(8) (N)		36,211	36,211	36,211	36,211	23,686	13,145		27,778
			T_{2B}(9) (Nm)		1,460	1,460	1,460	1,460	955	530		1,120
	20	84.883	F_{2T}(8) (N)		30,159	30,159	30,159	30,159	16,493	8,364		22,148
			T_{2B}(9) (Nm)		1,280	1,280	1,280	1,280	700	355		940
	23	97.615	F_{2T}(8) (N)		30,323	30,323	30,323	30,323	21,001	11,269		22,025
			T_{2B}(9) (Nm)		1,480	1,480	1,480	1,480	1,025	550		1,075
5	12	68.662	F_{2T}(8) (N)	31,259	31,259	31,259	30,945	30,945		8,482		19,007
			T_{2B}(9) (Nm)	995	995	995	985	985		270		605
	14	77.272	F_{2T}(8) (N)	42,142	42,142	42,142	42,142	42,142		12,656		30,967
			T_{2B}(9) (Nm)	1,565	1,565	1,565	1,565	1,565		470		1,150
	16	84.883	F_{2T}(8) (N)	47,713	47,713	47,713	47,595	47,595		18,025		36,992
			T_{2B}(9) (Nm)	2,025	2,025	2,025	2,020	2,020		765		1,570
	18	95.493	F_{2T}(8) (N)	55,187	55,187	55,187	55,083	55,083		22,096		46,181
			T_{2B}(9) (Nm)	2,635	2,635	2,635	2,630	2,630		1,055		2,205
	19	100.798	F_{2T}(8) (N)	55,854	55,854	55,854	55,755	55,755		24,207		46,727
			T_{2B}(9) (Nm)	2,815	2,815	2,815	2,810	2,810		1,220		2,355
6	12	82.394	F_{2T}(8) (N)	41,233	41,233	41,233	41,102	41,102		14,792		26,965
			T_{2B}(9) (Nm)	1,575	1,575	1,575	1,570	1,570		565		1,030
	13	88.761	F_{2T}(8) (N)	45,311	45,311	45,311	45,191	45,191		17,400		31,295
			T_{2B}(9) (Nm)	1,875	1,875	1,875	1,870	1,870		720		1,295
	15	95.493	F_{2T}(8) (N)	57,701	57,701	57,701	57,596	57,596		26,285		44,611
			T_{2B}(9) (Nm)	2,755	2,755	2,755	2,750	2,750		1,255		2,130
	16	101.859	F_{2T}(8) (N)	62,832	62,832	62,832	62,832	62,832		29,452		50,854
			T_{2B}(9) (Nm)	3,200	3,200	3,200	3,200	3,200		1,500		2,590
8	12	109.859	F_{2T}(8) (N)	63,814	63,814		63,715	63,715		31,710		41,921
			T_{2B}(9) (Nm)	3,250	3,250		3,245	3,245		1615		2,135

* The Maximal Driving Torque is also to be understood as the Maximal Acceleration Torque T_{2B}.
The Emergency Stop Torque $T_{2NOT} = 2 \times T_{2B}$, under the condition limited 1000 times in the whole service period.

(1) Number of Teeth (5) Working Pitch Circle Diameter (in mm) (8) Maximum Feed -Force (9) Maximum Driving Torque

★ Note: Not for German market !

Pinion with Helical Teeth

(Interface : Teeth Plate / EN ISO 9409-1-A)

Quality DIN 4 / Alloy Steel
Tooth Thickness Tolerance : e24
Left-Hand Helical Teeth
Case-Hardened and Teeth Ground

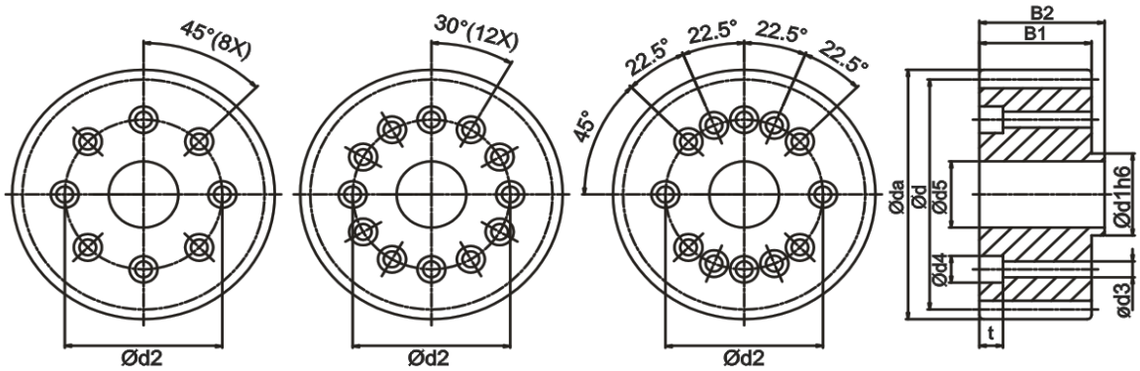

Fig. A Fig. B Fig. C

Mn	z(1)	x(2)	da(3)	d(4)	dw(5)	d1	d2	B1	B2	d3	d4	t	d5	L(6)	Fig	Order Code
2	26	0.407	60.800	55.174	56.800	20.0	31.5	26	29	5.5	9.5	12.0	16.2	173.334	A	C02L26A031
	27	0.000	61.296	57.296	57.296	20.0	31.5	30	33	5.5	9.5	11.0	16.2	180.000	A	C02L27A031
	29	0.415	67.200	61.540	63.200	20.0	31.5	26	29	5.5	9.5	12.0	16.2	193.334	A	C02L29A031
	35	0.382	79.800	74.272	75.800	20.0	31.5	26	29	5.5	9.5	12.0	16.2	233.334	A	C02L35A031
	29	0.415	67.200	61.540	63.200	25.0	40.0	26	29	6.6	11.0	10.5	20.3	193.334	A	C02L29A040
	33	0.393	75.599	70.028	71.599	31.5	50.0	26	29	6.6	11.0	14.0	23.7	220.000	A	C02L33A050
	36	0.000	80.394	76.394	76.394	31.5	50.0	30	33	6.6	11.0	8.0	23.7	240.000	A	C02L36A050
	37	0.421	84.200	78.517	80.200	31.5	50.0	26	29	6.6	11.0	14.0	23.7	246.667	A	C02L37A050
	37	0.421	84.200	78.517	80.200	31.5	50.0	26	29	6.6	11.0	14.0	23.7	246.667	B	C02L37B050
	40	0.379	90.400	84.883	86.400	40.0	63.0	26	29	6.6	11.0	11.5	32.2	266.667	C	C02L40C063
	45	0.327	100.800	95.493	96.800	40.0	63.0	26	29	6.6	11.0	11.5	32.2	300.000	C	C02L45C063
3	30	0.000	101.493	95.493	95.493	40.0	63.0	35	39	6.6	11.0	9.5	32.2	300.000	C	C03L30C063
	31	0.354	106.800	98.676	100.800	31.5	50.0	31	35	6.6	11.0	9.0	23.7	310.000	A	C03L31A050
	35	0.365	119.600	111.409	113.600	50.0	80.0	31	35	9.0	14.0	10.5	32.2	350.000	B	C03L35B080
	40	0.379	135.599	127.324	129.599	50.0	80.0	31	35	9.0	14.0	10.5	32.2	400.000	B	C03L40B080
4	30	0.000	135.324	127.324	127.324	50.0	80.0	45	49	9.0	14.0	9.5	32.2	400.000	B	C04L30B080
	38	0.240	171.200	161.277	163.200	80.0	125.0	41	45	11.0	17.5	10.5	56.1	506.667	B	C04L38B125
5	21	0.000	121.409	111.409	111.409	50.0	80.0	59	64	9.0	14.0	11.5	32.2	350.000	B	C05L21B080
	36	0.000	200.986	190.986	190.986	80.0	125.0	55	60	11.0	17.5	12.5	56.1	600.000	B	C05L36B125

(1) Number of teeth (2) Profile modification factor (3) Diameter of addendum circle (4) Pitch circle diameter
(5) Working pitch circle diameter (6) Pitch circle length $L = \pi \times d$

The surface hardness reaches to 60 HRc after case hardening
Teeth surface ground in order to reduce noise and improve wear resistance
Accessories include hexagon socket head cap screws（Strength 12.9，DIN 912）

Note : The strength of screws is limits the max. transmission torque. Please refer to the table below for Pinion Teeth Plate.

$d1_{h6}$	d2	Bolt / Screw Size	Max. Torque (Nm)
20	31.5	M5	75
25	40	M6	140
31.5	50	M6	175
40	63	M6	335
50	80	M8	810
80	125	M10	2,055

Pinion with Helical Teeth

(Interface : Teeth Plate / EN ISO 9409-1-A)

Quality DIN 4 / Alloy Steel
Tooth Thickness Tolerance : e24
Left-Hand Helical Teeth
Case-Hardened and Teeth Ground

Bolt Circle Ø50

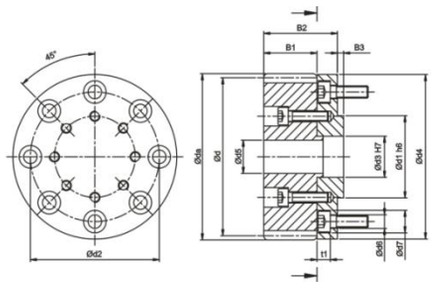

Mn.	z(1)	x(2)	da(3)	d(4)	dw(5)	d1 h6	d2	d3 H7	d4	d5	B1	B2	B3	d6	d7	t1	L(6)	Order Code	
																		Pinion	Flange
2	26	0.407	60.800	55.174	56.800	31.5	50	20	63	16.2	26	36	3	6.6	11	6.5	173.334	C02L26A031	FA050
	27	0.000	61.296	57.296	57.296	31.5	50	20	63	16.2	30	40	3	6.6	11	6.5	180.000	C02L27A031	FA050
	29	0.415	67.200	61.540	63.200	31.5	50	20	63	16.2	26	36	3	6.6	11	6.5	193.334	C02L29A031	FA050
	29	0.415	67.200	61.540	63.200	31.5	50	25	63	16.2	26	36	3	6.6	11	6.5	193.334	C02L29A040	FB050
	35	0.382	79.800	74.272	75.800	31.5	50	20	63	16.2	26	36	3	6.6	11	6.5	233.334	C02L35A031	FA050

Bolt Circle Ø63

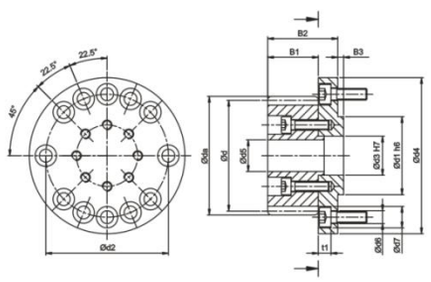

Mn.	z(1)	x(2)	da(3)	d(4)	dw(5)	d1 h6	d2	d3 H7	d4	d5	B1	B2	B3	d6	d7	t1	L(6)	Order Code	
																		Pinion	Flange
2	26	0.407	60.800	55.174	56.800	40	63	20	80	16.2	26	36	3	6.6	11	6.5	173.334	C02L26A031	FA063
	27	0.000	61.296	57.296	57.296	40	63	20	80	16.2	30	40	3	6.6	11	6.5	180.000	C02L27A031	FA063
	29	0.415	67.200	61.540	63.200	40	63	20	80	16.2	26	36	3	6.6	11	6.5	193.334	C02L29A031	FA063
	35	0.382	79.800	74.272	75.800	40	63	20	80	16.2	26	36	3	6.6	11	6.5	233.334	C02L35A031	FA063

Bolt Circle Ø80

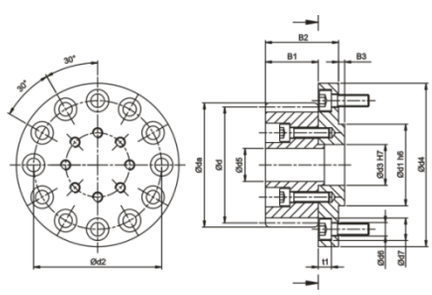

Mn.	z(1)	x(2)	da(3)	d(4)	dw(5)	d1 h6	d2	d3 H7	d4	d5	B1	B2	B3	d6	d7	t1	L(6)	Order Code	
																		Pinion	Flange
2	33	0.393	75.599	70.028	71.599	50	80	31.5	100	23.7	26	39	4	9	14	8.6	220.000	C02L33A050	FA080
	36	0.000	80.394	76.394	76.394	50	80	31.5	100	23.7	30	43	4	9	14	8.6	240.000	C02L36A050	FA080
	37	0.421	84.200	78.517	80.200	50	80	31.5	100	23.7	26	39	4	9	14	8.6	246.667	C02L37A050	FA080
3	31	0.354	106.800	98.676	100.800	50	80	31.5	100	23.7	31	44	4	9	14	8.6	310.000	C03L31A050	FA080

Quality DIN 4 / Alloy Steel
Tooth Thickness Tolerance : e24
Left-Hand Helical Teeth
Case-Hardened and Teeth Ground

Bolt Circle Ø125

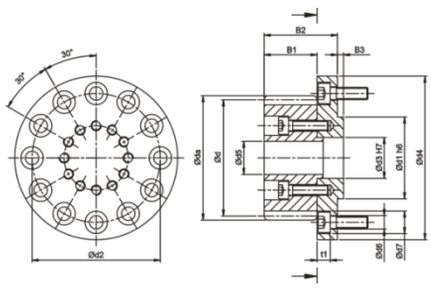

Mn.	z(1)	x(2)	da(3)	d(4)	dw(5)	d1 h6	d2	d3 H7	d4	d5	B1	B2	B3	d6	d7	t1	L(6)	Order Code	
																		Pinion	Flange
3	35	0.365	119.600	111.409	113.600	80	125	50	148	32.2	31	50	6	11	17.5	14	350	C03L35B080	FA125
	40	0.379	135.599	127.324	125.999	80	125	50	148	32.2	31	50	6	11	17.5	14	400	C03L40B080	FA125
4	30	0.000	135.324	127.324	127.324	80	125	50	148	32.2	45	64	6	11	17.5	14	400	C04L30B080	FA125
5	21	0.000	121.409	111.409	111.409	80	125	50	148	32.2	59	78	6	11	17.5	14	350	C05L21B080	FA125

(1) Number of teeth (2) Profile modification factor (3) Diameter of addendum circle (4) Pitch circle diameter
(5) Working pitch circle diameter (6) Pitch circle length L = π x d

The surface hardness reaches to 60 HRc after case hardening
Teeth surface ground in order to reduce noise and improve wear resistance
Accessories include hexagon socket head cap screws（Strength 12.9，DIN 912）
Flange material is generally carbon steel, no heat treatment
When pinion combined with flange, the maximum allowable feed force should be checked according to bolt strength

Note : The strength of screws is limits the max. transmission torque. Please refer to the table below for Pinion Teeth Plate with Flange.

d1 h6	d2	Bolt / Screw Size	Max. Torque (Nm)
31.5	50	M6	175
40	63	M6	335
50	80	M8	810
80	125	M10	2,055

Friction Foil

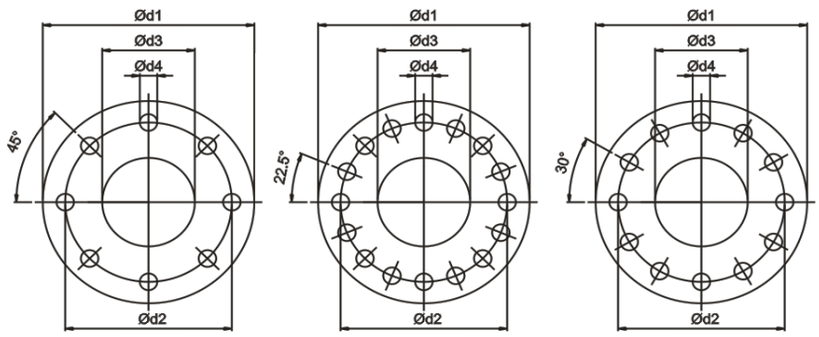

Fig. A Fig. B Fig. C

ISO interface	d1	d2	d3	d4	Fig	Max. Torque (Nm)	Order code
A-31.5	39	31.5	20	5.5	A	98	FR031
A-50	62	50	31.5	6.6	A	228	FR050
A-63	80	63	40	6.6	B	435	FR063
A-80	100	80	50	9	C	1050	FR080
A-125	148	125	80	11	C	2670	FR125

To apply the diamond-coated friction foil between the teeth plate and the extending flange, the static friction coefficient is increased. Hence the effective transmission torque can be enhanced at about 30%. Please also refer to the torque limitation due to screws, Page.42.

Table of screw tightening torque

Screw	Screw tightening torque (Nm)
M5 x 0.8P	9.8
M6 x 1P	17
M8 x 1.25P	41
M10 x 1.5P	80
M12 x 1.75P	139
M16 x 2P	343
M20 x 2.5P	692
M24 x 3P	1,190
M30 x 3.5P	2,380
M36 x 4P	4,136

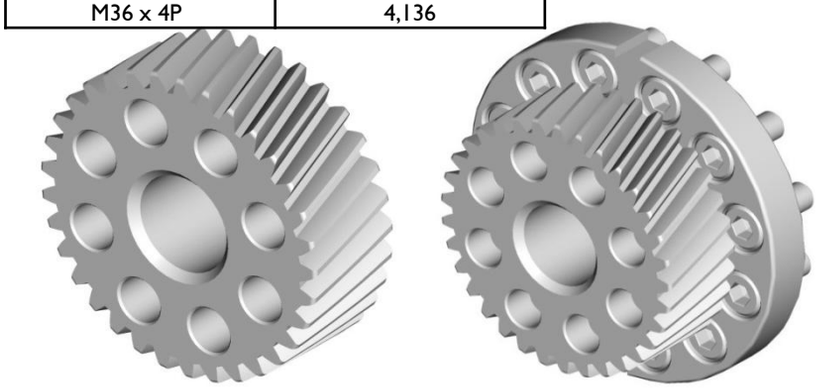

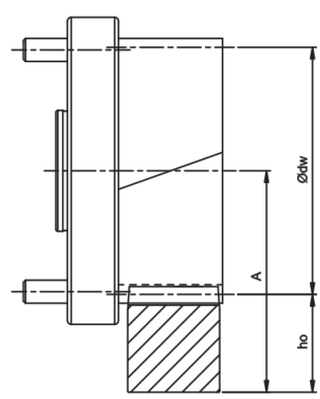

$$A = ho + \frac{\phi\, dw}{2}$$

In Table 3, the maximum permissible torque of pinion Teeth Plate, and the rack is calculated on the basis of a speed of 1.5 m/s and providing good lubrication (using an automatic lubrication system or manually applied grease every day), the tooth root strength factor $S_F \geqq 1.4$, tooth surface strength coefficient $S_H \geqq 1$, the safety factor $S_B \fallingdotseq 1$, and the required service life of 20,000 hours. By higher speed, the max. permissible torque reduced. The user needs to increase the safety factor for the application.
Backlash changes by different center height. Please contact APEX under WWW.APEXDYNA.COM.

Table 3. The max. permitted torque and feed-force of pinion Teeth Plate

Pinion \ Rack			Quality	Q4	Q5	Q5+	Q6	Q6M	Q8H	Q8	Q9	Q10
			Material	Carbon Steel	Carbon Steel	Carbon Steel	Carbon Steel	Carbon Steel	Q&T Alloy Steel	Carbon Steel	Stainless Steel	Carbon Steel
			Heat Treatment	Induction Hardening	Induction Hardening	Induction Hardening	Induction Hardening	Induction Hardening	Quenched Tempered	Normaliz-ing	Solution	Induction Hardening
Mn	z(1)	dw(5)	Max. Torque * and Feed-Force									
2	26	56.8	F_{2T}(8) (N)		8,700		8,519	8,519	4,350	2,175		3,806
			T_{2B}(9) (Nm)		240		235	235	120	60		105
	27	57.296	F_{2T}(8) (N)		8,901		8,901	8,901	5,411	2,443		4,014
			T_{2B}(9) (Nm)		255		255	255	155	70		115
	29	63.2	F_{2T}(8) (N)		8,450		8,450	8,450	5,525	2,600		3,737
			T_{2B}(9) (Nm)		260		260	260	170	80		115
	33	71.599	F_{2T}(8) (N)		8,854		8,568	8,568	5,712	3,713		3,713
			T_{2B}(9) (Nm)		310		300	300	200	130		130
	35	75.8	F_{2T}(8) (N)		8,886		8,617	8,617	5,655	4,174		3,635
			T_{2B}(9) (Nm)		330		320	320	210	155		135
	36	76.394	F_{2T}(8) (N)		9,032		8,901	8,901	6,021	4,320		3,927
			T_{2B}(9) (Nm)		345		340	340	230	165		150
	37	80.2	F_{2T}(8) (N)		8,915		8,661	8,661	5,731	4,076		3,566
			T_{2B}(9) (Nm)		350		340	340	225	160		140
	40	86.4	F_{2T}(8) (N)		8,954		8,718	8,718	5,655	4,123		3,652
			T_{2B}(9) (Nm)		380		370	370	240	175		155
	45	96.8	F_{2T}(8) (N)		9,006		8,796	8,796	5,760	4,189		3,560
			T_{2B}(9) (Nm)		430		420	420	275	200		170
3	30	95.493	F_{2T}(8) (N)		16,965	16,965	16,755	16,755	12,462	9,006		11,310
			T_{2B}(9) (Nm)		810	810	800	800	595	430		540
	31	100.8	F_{2T}(8) (N)		16,417	16,417	16,215	16,215	11,958	8,817		10,742
			T_{2B}(9) (Nm)		810	810	800	800	590	435		530
	35	113.6	F_{2T}(8) (N)		16,426	16,426	16,247	16,247	11,938	8,976		10,592
			T_{2B}(9) (Nm)		915	915	905	905	665	500		590
	40	129.599	F_{2T}(8) (N)		13,509	13,509	13,273	13,273	9,817	7,383		8,718
			T_{2B}(9) (Nm)		860	860	845	845	625	470		555
4	30	127.324	F_{2T}(8) (N)		31,102	31,102	31,023	31,023	23,562	17,514		22,070
			T_{2B}(9) (Nm)		1,980	1,980	1,975	1,975	1,500	1,115		1,405
	38	163.2	F_{2T}(8) (N)		31,871	31,871	31,809	31,809	24,492	18,229		22,508
			T_{2B}(9) (Nm)		2,570	2,570	2,565	2,565	1,975	1,470		1,815
5	21	111.409	F_{2T}(8) (N)	47,483	47,483	47,483	47,393	47,393		17,683		37,609
			T_{2B}(9) (Nm)	2,645	2,645	2,645	2,640	2,640		985		2,095
	36	190.986	F_{2T}(8) (N)	52,360	52,360	52,360	52,360	52,360		31,782		42,045
			T_{2B}(9) (Nm)	5,000	5,000	5,000	5,000	5,000		3,035		4,015

* The Maximal Driving Torque is also to be understood as the Maximal Acceleration Torque T_{2B}.
The Emergency Stop Torque $T_{2NOT} = 2 \times T_{2B}$, under the condition limited 1000 times in the whole service period.

(1) Number of Teeth (5) Working Pitch Circle Diameter (in mm) (8) Maximum Feed-Force (9) Maximum Driving Torque

Pinion with Helical Teeth

(Interface : DIN 5480 / Spline)

Quality DIN 5 / Alloy Steel
Tooth Thickness Tolerance : e24
Left-Hand Helical Teeth
Case-Hardened and Teeth Ground

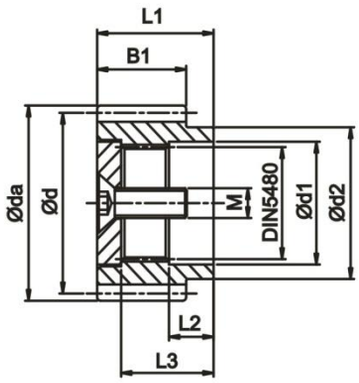

DIN 5480	Mn	z(1)	x(2)	da(3)	d(4)	dw(5)	B1	L1	d1	d2	L2	L3	L(6)	M	Order code
N16x0.8x30x18x7H	2	15	0.592	38.20	31.831	34.200	26	32	16	26	11	26.5	100.000	M5x15	D02L15N16
		16	0.612	40.40	33.953	36.400	26	32	16	28	11	26.5	106.667	M5x15	D02L16N16
		18	0.500	44.20	38.197	40.200	26	32	16	32	11	26.5	120.000	M5x15	D02L18N16
N22x1.25x30x16x7H	1.5	38	0.000	63.48	60.479	60.480	20	33	22	32	12	27.5	190.000	M8x25	D1JL38N22
	2	18	0.500	44.20	38.197	40.200	26	33	22	32	12	27.5	120.000	M8x25	D02L18N22
		20	0.490	48.40	42.441	44.400	26	33	22	34	12	27.5	133.334	M8x25	D02L20N22
		22	0.479	52.60	46.686	48.600	26	33	22	36	12	27.5	146.667	M8x25	D02L22N22
		25	0.000	57.05	53.052	53.052	26	33	22	36	12	27.5	166.667	M8x25	D02L25N22
N32x1.25x30x24x7H	2	23	0.498	54.80	48.808	50.800	26	34	32	42	13	27.0	153.334	M12x30	D02L23N32
		25	0.487	59.00	53.052	55.000	26	34	32	45	13	27.0	166.667	M12x30	D02L25N32
		27	0.376	62.80	57.296	58.800	26	34	32	48	13	27.0	180.000	M12x30	D02L27N32
N40x2x30x18x7H	3	20	0.456	72.40	63.662	66.400	31	51	40	55	20	41.0	200.000	M16x40	D03L20N40
		22	0.462	78.80	70.028	72.800	31	51	40	58	20	41.0	220.000	M16x40	D03L22N40
		24	0.468	85.20	76.394	79.200	31	51	40	62	20	41.0	240.000	M16x40	D03L24N40
N55x2x30x26x7H	4	20	0.400	96.08	84.883	88.080	41	54	55	75	20	44.0	266.667	M20x50	D04L20N55
N70x2x30x34x7H	4	25	0.340	116.82	106.103	108.820	41	65	75	94	24	55.0	333.334	M20x50	D04L25N70
N80x2x30x38x7H	5	24	0.348	140.80	127.324	130.800	51	73	85	110	24	62.5	400.000	M20x50	D05L24N80

(1) Number of teeth (2) Profile modification factor (3) Diameter of addendum circle (4) Pitch circle diameter
(5) Working pitch circle diameter (6) Pitch circle length L = π x d

Pinion material carburized, the surface hardness reaches to 60 HRc after case hardening
Teeth surface ground in order to reduce noise and improve wear resistance
Accessories include washers and hex head socket head cap screws（Strength 8.8，ISO 10642 / DIN 7991）

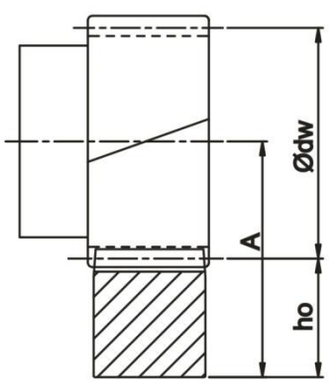

$$A = ho + \frac{\phi\, dw}{2}$$

In Table 4, the maximum permissible torque of pinion with DIN 5480, and the rack is calculated on the basis of a speed of 1.5 m/s and providing good lubrication (using an automatic lubrication system or manually applied grease every day), the tooth root strength factor $S_F \geqq 1.4$, tooth surface strength coefficient $S_H \geqq 1$, the safety factor $S_B \fallingdotseq 1$, and the required service life of 20,000 hours. By higher speed, the max. permissible torque reduced. The user needs to increase the safety factor for the application. Backlash changes by different center height. Please contact APEX under WWW.APEXDYNA.COM.

Table 4. The max. permitted torque and feed-force of pinion with DIN 5480

Pinion \ Rack			Quality	Q4	Q5	Q5+	Q6	Q6M	Q8H	Q8	Q9	Q10
			Material	Carbon Steel	Carbon Steel	Carbon Steel	Carbon Steel	Carbon Steel	Q&T Alloy Steel	Carbon Steel	Stainless Steel	Carbon Steel
			Heat Treatment	Induction Hardening	Induction Hardening	Induction Hardening	Induction Hardening	Induction Hardening	Quenched Tempered	Normaliz-ing	Solution	Induction Hardening
Mn	z(1)	dw(5)	Max. Torque * and Feed-Force									
1.5	38	60.48	F_{2T}(8) (N)				5,622			1,984		1,653
			T_{2B}(9) (Nm)				170			60		50
2	15	34.2	F_{2T}(8) (N)		8,482		8,168	8,168	2,199	1,571		3,456
			T_{2B}(9) (Nm)		135		130	130	35	25		55
	16	36.4	F_{2T}(8) (N)		8,541		8,541	8,541	2,651	1,767		4,418
			T_{2B}(9) (Nm)		145		145	145	45	30		75
	18	40.2	F_{2T}(8) (N)		8,901		8,901	8,901	3,665	2,094		4,974
			T_{2B}(9) (Nm)		170		170	170	70	40		95
	20	44.4	F_{2T}(8) (N)		8,247		8,247	8,247	2,356	1,649		4,006
			T_{2B}(9) (Nm)		175		175	175	50	35		85
	22	48.6	F_{2T}(8) (N)		8,354		8,354	8,354	2,999	1,714		4,070
			T_{2B}(9) (Nm)		195		195	195	70	40		95
	23	50.8	F_{2T}(8) (N)		8,400		8,195	8,195	3,278	1,843		3,893
			T_{2B}(9) (Nm)		205		200	200	80	45		95
	25	53.052	F_{2T}(8) (N)		9,048		8,859	8,859	4,712	2,262		4,524
			T_{2B}(9) (Nm)		240		235	235	125	60		120
	25	55	F_{2T}(8) (N)		8,482		8,294	8,294	3,958	2,073		3,958
			T_{2B}(9) (Nm)		225		220	220	105	55		105
	27	58.8	F_{2T}(8) (N)		8,727		8,552	8,552	4,887	2,269		3,840
			T_{2B}(9) (Nm)		250		245	245	140	65		110
3	20	66.4	F_{2T}(8) (N)		15,865	15,865	15,551	15,551	6,754	3,142		10,681
			T_{2B}(9) (Nm)		505	505	495	495	215	100		340
	22	72.8	F_{2T}(8) (N)		15,851	15,851	15,708	15,708	8,140	3,998		10,567
			T_{2B}(9) (Nm)		555	555	550	550	285	140		370
	24	79.2	F_{2T}(8) (N)		15,970	15,970	15,708	15,708	9,687	4,974		10,603
			T_{2B}(9) (Nm)		610	610	600	600	370	190		405
4	20	88.08	F_{2T}(8) (N)		28,628	28,628	28,628	28,628	14,726	7,304		20,381
			T_{2B}(9) (Nm)		1,215	1,215	1,215	1,215	625	310		865
	25	108.82	F_{2T}(8) (N)		29,311	29,311	29,217	29,217	21,865	12,064		20,546
			T_{2B}(9) (Nm)		1,555	1,555	1,550	1,550	1,160	640		1,090
5	24	130.8	F_{2T}(8) (N)	46,731	46,731	46,731	46,653	46,653		20,656		36,521
			T_{2B}(9) (Nm)	2,975	2,975	2,975	2,970	2,970		1,315		2,325

* The Maximal Driving Torque is also to be understood as the Maximal Acceleration Torque T_{2B}.
The Emergency Stop Torque $T_{2NOT} = 2 \times T_{2B}$, under the condition limited 1000 times in the whole service period.

(1) Number of Teeth (5) Working Pitch Circle Diameter (in mm) (8) Maximum Feed-Force (9) Maximum Driving Torque

Pinion with Helical Teeth

(Interface : Keyway for APEX AF / KF / AE / PII-Series)

Quality DIN 5 / Alloy Steel
Tooth Thickness Tolerance : e25
Left-Hand Helical Teeth
Case-Hardened and Teeth Ground

Combine with AF / KF Series gearbox

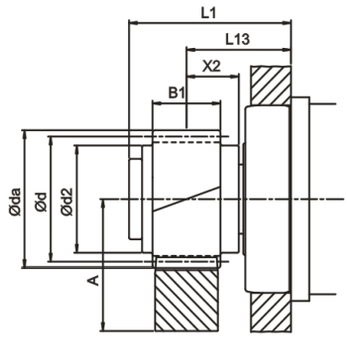

Gearbox	Mn	z(1)	x(2)	da(3)	d(4)	dw(5)	d2	B1	L1	L13	X2	L(6)	Order code
AF/AFR060 KF 060	2	18	0.401	43.8	38.197	39.8	30	26	54	39	19	120.000	E02L18
AF/AFR075 KF 075	2	22	0.179	51.4	46.686	47.4	40	26	63	40	20	146.667	E02L22
AF/AFR100 KF 100	2	26	0.007	59.2	55.174	55.2	46	26	96	51	21	173.334	E02L26
AF/AFR140 KF 140	3	24	0.001	82.4	76.394	76.4	62	31	122	65.5	35.5	240.000	E03L24

Combine with AE / PEII Series gearbox

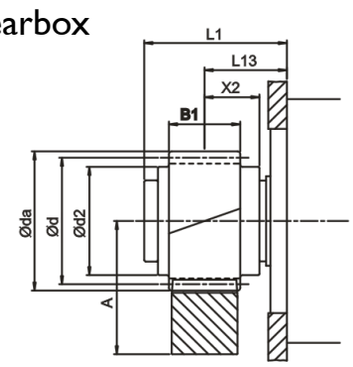

Gearbox	Mn	z(1)	x(2)	da(3)	d(4)	dw(5)	d2	B1	L1	L13	X2	L(6)	Order code
AE / AER 070	2	18	0.401	43.8	38.197	39.8	30	26	41.5	26.5	19	120.000	E02L18
PEII / PEIIR 070									42	27			
AE / AER 090	2	22	0.179	51.4	46.686	47.4	40	26	52.5	29.5	20	146.667	E02L22
PEII / PEIIR 090									53	30			
AE / AER 120	2	26	0.007	59.2	55.174	55.2	46	26	85	40	21	173.334	E02L26
PEII / PEIIR 120									78	33			
AE / AER 155	3	24	0.001	82.4	76.394	76.4	62	31	110	53.5	35.5	240.000	E03L24
PEII / PEIIR 155									107	50.5			

(1) Number of teeth (2) Profile modification factor (3) Diameter of addendum circle (4) Pitch circle diameter
(5) Working pitch circle diameter (6) Pitch circle length L = π x d

Pinion material carburized, the surface hardness reaches to 60 HRc after case hardening
Teeth surface ground in order to reduce noise and improve wear resistance
Accessories include hexagon socket head cap screws（Strength 12.9，DIN 912）

Pinion with Helical Teeth

(Interface : Keyway)

Quality DIN 5 / Alloy Steel
Tooth Thickness Tolerance : e25
Left-Hand Helical Teeth
Case-Hardened and Teeth Ground

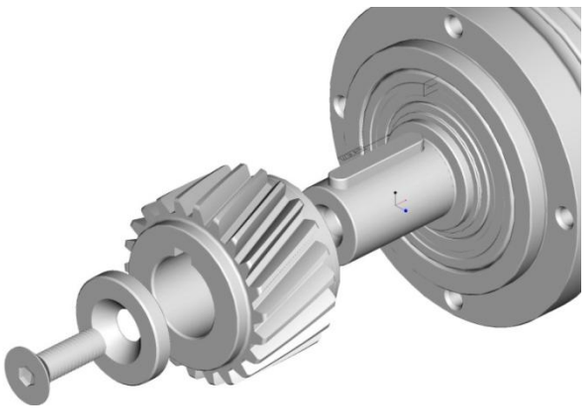

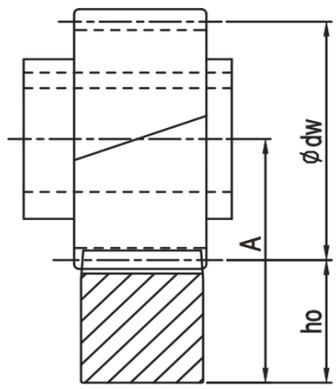

$$A = ho + \frac{\phi\, dw}{2}$$

In table 5, the maximum permissible torque of pinion with Keyway for APEX AF / KF / AE / PII - Gearbox, and the rack is calculated on the basis of a speed of 1.5 m/s and providing good lubrication (using an automatic lubrication system or manually applied grease every day), the tooth root strength factor $S_F \geqq 1.4$, tooth surface strength coefficient $S_H \geqq 1$, the safety factor $S_B \fallingdotseq 1$, and the required service life of 20,000 hours. By higher speed, the max. permissible torque reduced. The user needs to increase the safety factor for the application.
Backlash changes by different center height. Please contact APEX under WWW.APEXDYNA.COM.

Table 5, the max. permitted torque and feed-force of pinion with Keyway for APEX AF / KF / AE / PII-Series

Pinion \ Rack			Quality	Q4	Q5	Q5+	Q6	Q6M	Q8H	Q8	Q9	Q10
			Material	Carbon Steel	Carbon Steel	Carbon Steel	Carbon Steel	Carbon Steel	Q&T Alloy Steel	Carbon Steel	Stainless Steel	Carbon Steel
			Heat Treatment	Induction Hardening	Induction Hardening	Induction Hardening	Induction Hardening	Induction Hardening	Quenched Tempered	Normaliz-ing	Solution	Induction Hardening
Mn	z(1)	dw(5)	Max. Torque * and Feed-Force									
2	18	39.8	F_{2T}(8) (N)		9,163		9,163	9,163	3,665	2,094		4,974
			T_{2B}(9) (Nm)		175		175	175	70	40		95
	22	47.4	F_{2T}(8) (N)		8,782		8,568	8,568	3,213	1,928		4,284
			T_{2B}(9) (Nm)		205		200	200	75	45		100
	26	55.2	F_{2T}(8) (N)		9,062		8,881	8,881	4,894	2,356		4,350
			T_{2B}(9) (Nm)		250		245	245	135	65		120
3	24	76.4	F_{2T}(8) (N)		16,886	16,886	16,624	16,624	10,864	5,760		11,650
			T_{2B}(9) (Nm)		645	645	635	635	415	220		445

* The Maximal Driving Torque is also to be understood as the Maximal Acceleration Torque T_{2B}.
The Emergency Stop Torque $T_{2NOT} = 2 \times T_{2B}$, under the condition limited 1000 times in the whole service period.

(1) Number of Teeth (5) Working Pitch Circle Diameter (in mm) (8) Maximum Feed-Force (9) Maximum Driving Torque

Pinion with Helical Teeth

(Interface : Keyway)

Quality DIN 5 / Alloy Steel
Tooth Thickness Tolerance : e25 *
Left-Hand Helical Teeth
Case-Hardened and Teeth Ground

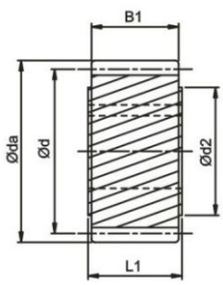

Fig. A

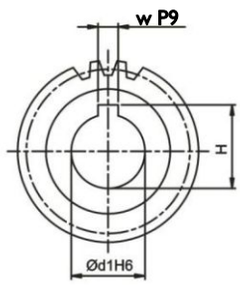

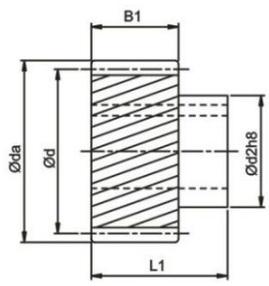

Fig. B

Module 1

z(1)	x(2)	da(3)	d(4)	dw(5)	d1 H6	d2	B1	L1	w P9	H	L(6)	Fig	Order code	
													Pinion	Shrink Disc
30	0	33.831	31.831	31.831	12	22	17	19	4	13.8	100	A	F01L30A12	
30	0	33.831	31.831	31.831	13	22	17	19	5	15.3	100	A	F01L30A13	

Module 1.5

z(1)	x(2)	da(3)	d(4)	dw(5)	d1 H6	d2	B1	L1	w P9	H	L(6)	Fig	Order code	
													Pinion	Shrink Disc
20	0	34.831	31.831	31.831	11	25	20	22	4	12.8	100	A	F1JL20A11	
20	0	34.831	31.831	31.831	14	25	20	22	5	16.3	100	A	F1JL20A14	
20	0	34.831	31.831	31.831	16	25	20	22	5	18.3	100	A	F1JL20A16	
21	0	36.423	33.423	33.423	16	30	20	46	5	18.3	105	B	F1JL21B16	SSD-30

Module 2

z(1)	x(2)	da(3)	d(4)	dw(5)	d1 H6	d2	B1	L1	w P9	H	L(6)	Fig	Order code	
													Pinion	Shrink Disc
18	0	42.197	38.197	38.197	16	25	28	30	5	18.3	120	A	F02L18A16	
20	0	46.441	42.441	42.441	19	30	28	30	6	21.8	133.334	A	F02L20A19	
20	0	46.441	42.441	42.441	19	30	28	56	6	21.8	133.334	B	F02L20B19	SSD-30
20	0	46.441	42.441	42.441	20	30	28	30	6	22.8	133.334	A	F02L20A20	
20	0	46.441	42.441	42.441	22	30	28	30	6	24.8	133.334	A	F02L20A22	
20	0	46.441	42.441	42.441	22	36	28	56	6	24.8	133.334	B	F02L20B22	SSD-36
21	0	48.563	44.563	44.563	16	25	28	30	5	18.3	140	A	F02L21A16	
21	0	48.563	44.563	44.563	22	36	28	56	6	24.8	140	B	F02L21B22	SSD-36
22	0	50.686	46.686	46.686	19	30	28	30	6	21.8	146.667	A	F02L22A19	
22	0	50.686	46.686	46.686	19	30	28	56	6	21.8	146.667	B	F02L22B19	SSD-30
22	0	50.686	46.686	46.686	22	30	28	30	6	24.8	146.667	A	F02L22A22	
22	0	50.686	46.686	46.686	22	36	28	56	6	24.8	146.667	B	F02L22B22	SSD-36
25	0	57.052	53.052	53.052	19	30	28	30	6	21.8	166.667	A	F02L25A19	
25	0	57.052	53.052	53.052	19	30	28	56	6	21.8	166.667	B	F02L25B19	SSD-30
25	0	57.052	53.052	53.052	20	30	28	30	6	22.8	166.667	A	F02L25A20	
25	0	57.052	53.052	53.052	22	30	28	30	6	24.8	166.667	A	F02L25A22	
25	0	57.052	53.052	53.052	22	36	28	56	6	24.8	166.667	B	F02L25B22	SSD-36
25	0	57.052	53.052	53.052	25	36	28	30	8	28.3	166.667	A	F02L25A25	

* By Module 1.5, the Tooth Thickness Tolerance = f 24.
(1) Number of teeth (2) Profile modification factor (3) Diameter of addendum circle (4) Pitch circle diameter
(5) Working pitch circle diameter (6) Pitch circle length L = π x d

Quality DIN 5 / Alloy Steel

Tooth Thickness Tolerance : e25
Left-Hand Helical Teeth
Case-Hardened and Teeth Ground

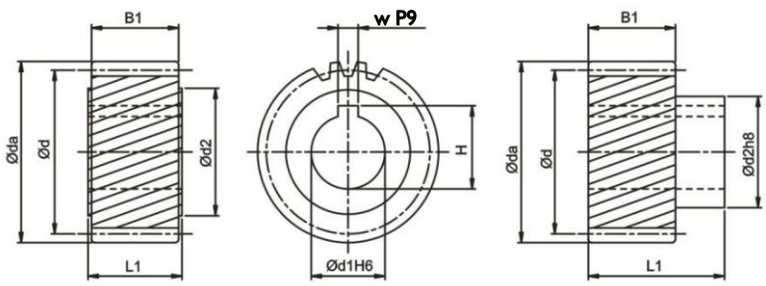

Fig. A Fig. B

Module 2

z(1)	x(2)	da(3)	d(4)	dw(5)	d1 H6	d2	B1	L1	w P9	H	L(6)	Fig	Order code	
													Pinion	Shrink Disc
28	0	63.418	59.418	59.418	19	30	28	30	6	21.8	186.667	A	F02L28A19	
28	0	63.418	59.418	59.418	19	30	28	56	6	21.8	186.667	B	F02L28B19	SSD-30
28	0	63.418	59.418	59.418	22	30	28	30	6	24.8	186.667	A	F02L28A22	
28	0	63.418	59.418	59.418	22	36	28	56	6	24.8	186.667	B	F02L28B22	SSD-36
28	0	63.418	59.418	59.418	35	48	28	30	10	38.3	186.667	A	F02L28A35	
30	0	67.662	63.662	63.661	16	25	28	30	5	18.3	200	A	F02L30A16	
30	0	67.662	63.662	63.661	20	30	28	30	6	22.8	200	A	F02L30A20	
30	0	67.662	63.662	63.661	22	36	28	56	6	24.8	200	B	F02L30B22	SSD-36
30	0	67.662	63.662	63.661	25	36	28	30	8	28.3	200	A	F02L30A25	
30	0	67.662	63.662	63.661	30	45	28	30	8	33.3	200	A	F02L30A30	
30	0	67.662	63.662	63.661	30	50	28	60	8	33.3	200	B	F02L30B30	SSD-50
30	0	67.662	63.662	63.661	32	55	28	65	10	35.3	200	B	F02L30B32	SSD-55
32	0	71.906	67.906	67.906	20	30	28	30	6	22.8	213.334	A	F02L32A20	
32	0	71.906	67.906	67.906	22	30	28	30	6	24.8	213.334	A	F02L32A22	
32	0	71.906	67.906	67.906	22	36	28	56	6	24.8	213.334	B	F02L32B22	SSD-36
32	0	71.906	67.906	67.906	25	36	28	30	8	28.3	213.334	A	F02L32A25	
32	0	71.906	67.906	67.906	35	48	28	30	10	38.3	213.334	A	F02L32A35	
36	0	80.394	76.394	76.394	35	48	28	30	10	38.3	240	A	F02L36A35	
39	0	86.761	82.761	82.761	32	55	28	65	10	35.3	260	B	F02L39B32	SSD-55
40	0	88.883	84.883	84.883	35	48	28	30	10	38.3	266.667	A	F02L40A35	

Module 2.5

z(1)	x(2)	da(3)	d(4)	dw(5)	d1 H6	d2	B1	L1	w P9	H	L(6)	Fig	Order code	
													Pinion	Shrink Disc
24	0	68.662	63.662	63.662	25	36	28	30	8	28.3	200	A	F2JL24A25	
24	0	68.662	63.662	63.662	25	44	28	60	8	28.3	200	B	F2JL24B25	SSD-44

Pinion with Helical Teeth

(Interface : Keyway)

Quality DIN 5 / Alloy Steel
Tooth Thickness Tolerance : e25
Left-Hand Helical Teeth
Case-Hardened and Teeth Ground

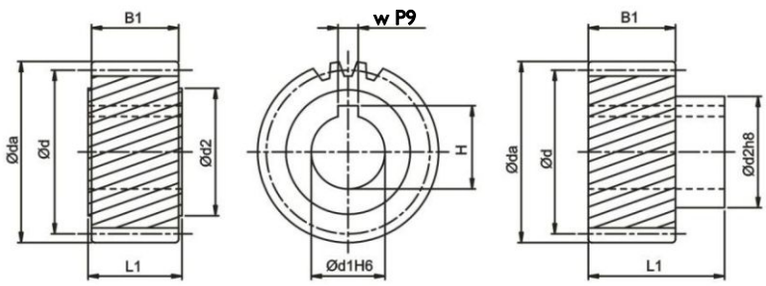

Fig. A Fig. B

Module 3

z(1)	x(2)	da(3)	d(4)	dw(5)	d1 H6	d2	B1	L1	w P9	H	L(6)	Fig	Order code	
													Pinion	Shrink Disc
20	0	69.661	63.662	63.662	22	36	28	56	6	24.8	200	B	F03L20B22	SSD-36
20	0	69.661	63.662	63.662	25	44	28	60	8	28.3	200	B	F03L20B25	SSD-44
20	0	69.661	63.662	63.662	30	45	28	30	8	33.3	200	A	F03L20A30	
20	0	69.661	63.662	63.662	30	50	28	60	8	33.3	200	B	F03L20B30	SSD-50
20	0	69.661	63.662	63.662	32	55	28	65	10	35.3	200	B	F03L20B32	SSD-55
20	0	69.661	63.662	63.662	35	48	28	30	10	38.3	200	A	F03L20A35	
22	0	76.028	70.028	70.028	25	36	28	30	8	28.3	220	A	F03L22A25	
22	0	76.028	70.028	70.028	30	45	28	30	8	33.3	220	A	F03L22A30	
22	0	76.028	70.028	70.028	32	55	28	65	10	35.3	220	B	F03L22B32	SSD-55
22	0	76.028	70.028	70.028	35	48	28	30	10	38.3	220	A	F03L22A35	
22	0	76.028	70.028	70.028	40	62	28	65	12	43.3	220	B	F03L22B40	SSD-62
25	0	85.578	79.578	79.578	22	36	28	56	6	24.8	250	B	F03L25B22	SSD-36
25	0	85.578	79.578	79.578	25	36	28	30	8	28.3	250	A	F03L25A25	
25	0	85.578	79.578	79.578	25	44	28	60	8	28.3	250	B	F03L25B25	SSD-44
25	0	85.578	79.578	79.578	30	45	28	30	8	33.3	250	A	F03L25A30	
25	0	85.578	79.578	79.578	30	50	28	60	8	33.3	250	B	F03L25B30	SSD-50
25	0	85.578	79.578	79.578	32	55	28	65	10	35.3	250	B	F03L25B32	SSD-55
25	0	85.578	79.578	79.578	35	48	28	30	10	38.3	250	A	F03L25A35	
25	0	85.578	79.578	79.578	35	55	28	65	10	38.3	250	B	F03L25B35	SSD-55
25	0	85.578	79.578	79.578	40	62	28	65	12	43.3	250	B	F03L25B40	SSD-62
25	0	85.578	79.578	79.578	40	70	28	50	12	43.3	250	A	F03L25A40	
28	0	95.127	89.127	89.127	32	55	28	65	10	35.3	280	B	F03L28B32	SSD-55
28	0	95.127	89.127	89.127	40	62	28	65	12	43.3	280	B	F03L28B40	SSD-62
32	0	107.859	101.859	101.859	32	55	28	65	10	35.3	320	B	F03L32B32	SSD-55
32	0	107.859	101.859	101.859	40	62	28	65	12	43.3	320	B	F03L32B40	SSD-62

Module 4

z(1)	x(2)	da(3)	d(4)	dw(5)	d1 H6	d2	B1	L1	w P9	H	L(6)	Fig	Order code	
													Pinion	Shrink Disc
15	0	71.662	63.662	63.662	35	52	40	50	10	38.3	200.000	A	F04L15A35	
18	0	84.394	76.394	76.394	32	55	40	75	10	35.3	240.000	B	F04L18B32	SSD-55
20	0	92.883	84.883	84.883	35	52	40	50	10	38.3	266.667	A	F04L20A35	
20	0	92.883	84.883	84.883	45	65	40	50	14	48.8	266.667	A	F04L20A45	
21	0	97.127	89.127	89.127	32	55	40	75	10	35.3	280.000	B	F04L21B32	SSD-55
21	0	97.127	89.127	89.127	35	55	40	75	10	38.3	280.000	B	F04L21B35	SSD-55
21	0	97.127	89.127	89.127	40	62	40	75	12	43.3	280.000	B	F04L21B40	SSD-62
21	0	97.127	89.127	89.127	45	68	40	75	14	48.8	280.000	B	F04L21B45	SSD-68

(1) Number of teeth (2) Profile modification factor (3) Diameter of addendum circle (4) Pitch circle diameter
(5) Working pitch circle diameter (6) Pitch circle length L = π x d

Quality DIN 5 / Alloy Steel

Tooth Thickness Tolerance : e25
Left-Hand Helical Teeth
Case-Hardened and Teeth Ground

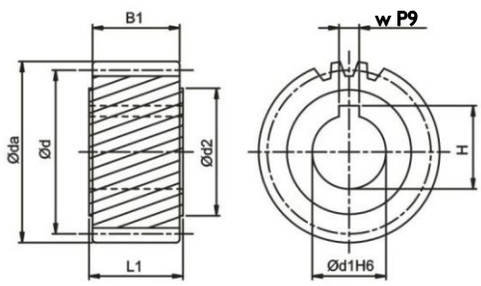

Fig. A

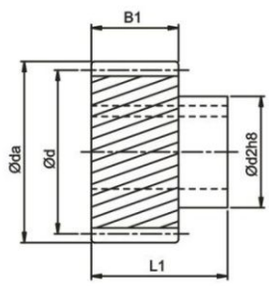

Fig. B

Module 4

z(1)	x(2)	da(3)	d(4)	dw(5)	d1 H6	d2	B1	L1	w P9	H	L(6)	Fig	Order code	
													Pinion	Shrink Disc
22	0	101.371	93.371	93.371	35	52	40	50	10	38.3	293.334	A	F04L22A35	
22	0	101.371	93.371	93.371	45	65	40	50	14	48.8	293.334	A	F04L22A45	
24	0	109.859	101.859	101.859	32	55	40	75	10	35.3	320.000	B	F04L24B32	SSD-55
24	0	109.859	101.859	101.859	35	55	40	75	10	38.3	320.000	B	F04L24B35	SSD-55
24	0	109.859	101.859	101.859	40	62	40	75	12	43.3	320.000	B	F04L24B40	SSD-62
24	0	109.859	101.859	101.859	45	68	40	75	14	48.8	320.000	B	F04L24B45	SSD-68
24	0	109.859	101.859	101.859	55	80	40	80	16	59.3	320.000	B	F04L24B55	SSD-80
25	0	114.103	106.103	106.103	35	52	40	50	10	38.3	333.334	A	F04L25A35	
25	0	114.103	106.103	106.103	45	65	40	50	14	48.8	333.334	A	F04L25A45	
25	0	114.103	106.103	106.103	55	80	40	80	16	59.3	333.334	B	F04L25B55	SSD-80

Module 5

z(1)	x(2)	da(3)	d(4)	dw(5)	d1 H6	d2	B1	L1	w P9	H	L(6)	Fig	Order code	
													Pinion	Shrink Disc
18	0	105.493	95.493	95.493	45	68	50	85	14	48.8	300	B	F05L18B45	SSD-68
24	0	137.324	127.324	127.324	45	68	50	85	14	48.8	400	B	F05L24B45	SSD-68
24	0	137.324	127.324	127.324	55	80	50	90	16	59.3	400	B	F05L24B55	SSD-80
24	0	137.324	127.324	127.324	75	110	50	110	20	79.9	400	B	F05L24B75	SSD-110

Module 6

z(1)	x(2)	da(3)	d(4)	dw(5)	d1 H6	d2	B1	L1	w P9	H	L(6)	Fig	Order code	
													Pinion	Shrink Disc
20	0	139.324	127.324	127.324	55	80	60	100	16	59.3	400	B	F06L20B55	SSD-80
20	0	139.324	127.324	127.324	75	110	60	120	20	79.9	400	B	F06L20B75	SSD-110
25	0	171.155	159.155	159.155	55	80	60	100	16	59.3	500	B	F06L25B55	SSD-80
25	0	171.155	159.155	159.155	75	110	60	120	20	79.9	500	B	F06L25B75	SSD-110

Pinion with Helical Teeth

(Interface : Keyway)

Quality DIN 5 / Alloy Steel
Tooth Thickness Tolerance : e25 **
Left-Hand Helical Teeth
Case-Hardened and Teeth Ground

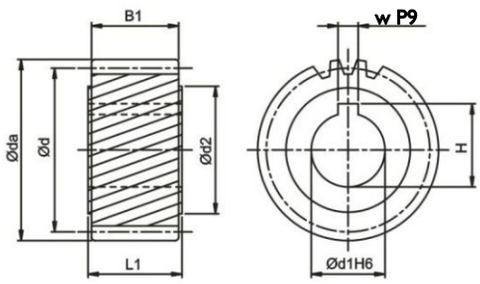

Fig. A

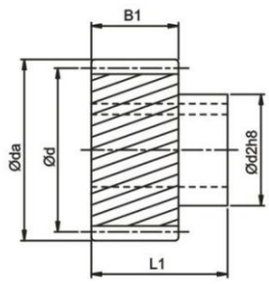

Fig. B

Module 8

z(1)	x(2)	da(3)	d(4)	dw(5)	d1 H6	d2	B1	L1	w P9	H	L(6)	Fig	Order code	
													Pinion	Shrink Disc
18	0	168.789	152.789	152.789	75	110	80	140	20	79.9	480.000	B	F08L18B75	SSD-110
20	0	185.766	169.766	169.766	85	125	80	145	22	90.4	533.334	B	F08L20B85	SSD-125

Module 10

z(1)	x(2)	da(3)	d(4)	dw(5)	d1 H6	d2	B1	L1	w P9	H	L(6)	Fig	Order code	
													Pinion	Shrink Disc
20	0	232.207	212.207	212.207	85	125	100	165	22	90.4	666.668	B	F10L20B85	SSD-125

** By Module 8 and 10, the Tooth Thickness Tolerance = f 23. (1) Number of teeth (2) Profile modification factor
(3) Diameter of addendum circle (4) Pitch circle diameter (5) Working pitch circle diameter (6) Pitch circle length L = π x d

Pinion material carburized, the surface hardness reaches to 60 HRc after case hardening
Teeth surface ground in order to reduce noise and improve wear resistance

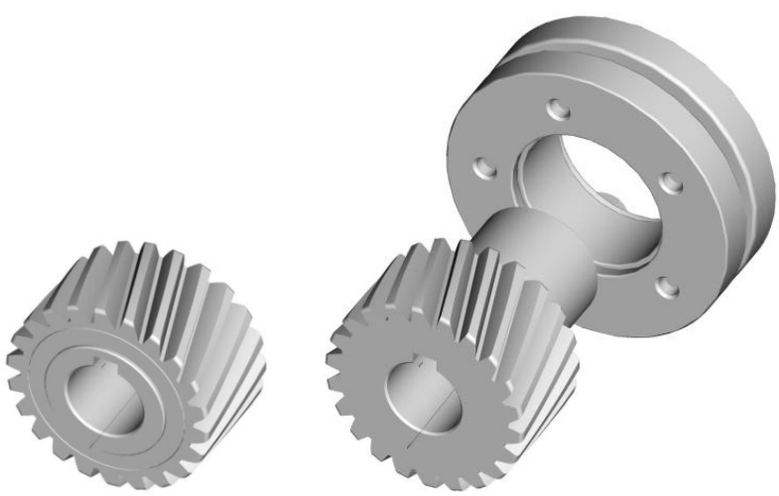

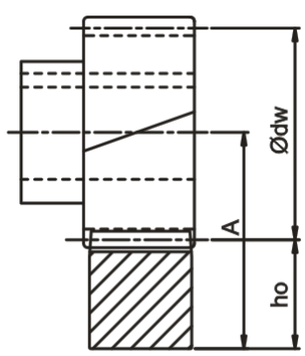

$$A \quad ho \quad \frac{dw}{2}$$

In Table 6, the maximum permissible torque of pinion with Keyway, and the rack is calculated on the basis of a speed of 1.5 m/s and providing good lubrication (using an automatic lubrication system or manually applied grease every day), the tooth root strength factor $S_F \geqq 1.4$, tooth surface strength coefficient $S_H \geqq 1$, the safety factor $S_B \fallingdotseq 1$, and the required service life of 20,000 hours. By higher speed, the max. permissible torque reduced. The user needs to increase the safety factor for the application. Backlash changes by different center height. Please contact APEX under WWW.APEXDYNA.COM.

Table 6. The max. permitted torque and feed-force of pinion with Keyway

Pinion \ Rack			Quality	Q4	Q5	Q5+	Q6	Q6M	Q8H	Q8	Q9	Q10
			Material	Carbon Steel	Carbon Steel	Carbon Steel	Carbon Steel	Carbon Steel	Q&T Alloy Steel	Carbon Steel	Stainless Steel	Carbon Steel
			Heat Treatment	Induction Hardening	Induction Hardening	Induction Hardening	Induction Hardening	Induction Hardening	Quenched Tempered	Normaliz-ing	Solution	Induction Hardening
Mn	z(1)	dw(5)	Max. Torque * and Feed-Force									
1	30	31.831	F_{2T}(8) (N)				2,199					
			T_{2B}(9) (Nm)				35					
1.5	20	31.831	F_{2T}(8) (N)				5,027			628		1,257
			T_{2B}(9) (Nm)				80			10		20
	21	33.423	F_{2T}(8) (N)				5,086			598		1,197
			T_{2B}(9) (Nm)				85			10		20
2	18	38.197	F_{2T}(8) (N)		9,425		9,163	9,163	2,880	1,833		2,880
			T_{2B}(9) (Nm)		180		175	175	55	35		55
	20	42.441	F_{2T}(8) (N)		8,718		8,247	8,247	2,121	1414		2,356
			T_{2B}(9) (Nm)		185		175	175	45	30		50
	21	44.563	F_{2T}(8) (N)		8,752		8,303	8,303	2,244	1,346		2,468
			T_{2B}(9) (Nm)		195		185	185	50	30		55
	22	46.686	F_{2T}(8) (N)		8,782		8,354	8,354	2,356	1,499		2,356
			T_{2B}(9) (Nm)		205		195	195	55	35		55
	25	53.052	F_{2T}(8) (N)		8,859		8,294	8,294	3,204	1,885		2,262
			T_{2B}(9) (Nm)		235		220	220	85	50		60
	28	59.418	F_{2T}(8) (N)		8,920		8,415	8,415	4,207	2,020		2,188
			T_{2B}(9) (Nm)		265		250	250	125	60		65
	30	63.661	F_{2T}(8) (N)		8,954		8,325	8,325	4,555	2,199		2,199
			T_{2B}(9) (Nm)		285		265	265	145	70		70
	32	67.906	F_{2T}(8) (N)		8,983		8,394	8,394	4,418	2,356		2,209
			T_{2B}(9) (Nm)		305		285	285	150	80		75
	36	76.394	F_{2T}(8) (N)		9,032		8,378	8,378	4,451	2,880		2,225
			T_{2B}(9) (Nm)		345		320	320	170	110		85
	39	82.761	F_{2T}(8) (N)		9,062		8,337	8,337	4,471	2,779		2,175
			T_{2B}(9) (Nm)		375		345	345	185	115		90
	40	84.883	F_{2T}(8) (N)		9,071		8,364	8,364	4,477	2,827		2,238
			T_{2B}(9) (Nm)		385		355	355	190	120		95
2.5	24	63.662	F_{2T}(8) (N)		13,980		13,195	13,195	5,184	2,827		5,027
			T_{2B}(9) (Nm)		445		420	420	165	90		160
3	20	63.662	F_{2T}(8) (N)		16,807	16,807	16,493	16,493	5,341	2,356		8,796
			T_{2B}(9) (Nm)		535	535	525	525	170	75		280
	22	70.028	F_{2T}(8) (N)		16,850	16,850	16,565	16,565	6,712	2,713		8,568
			T_{2B}(9) (Nm)		590	590	580	580	235	95		300
	25	79.578	F_{2T}(8) (N)		16,965	16,965	16,588	16,588	8,922	3,770		8,419
			T_{2B}(9) (Nm)		675	675	660	660	355	150		335
	28	89.127	F_{2T}(8) (N)		17,054	17,054	16,606	16,606	10,883	5,161		8,303
			T_{2B}(9) (Nm)		760	760	740	740	485	230		370
	32	101.859	F_{2T}(8) (N)		17,082	17,082	16,690	16,690	10,799	7,265		8,247
			T_{2B}(9) (Nm)		870	870	850	850	550	370		420

* The Maximal Driving Torque is also to be understood as the Maximal Acceleration Torque T_{2B}.
The Emergency Stop Torque $T_{2NOT} = 2 \times T_{2B}$, under the condition limited 1000 times in the whole service period.

(1) Number of Teeth (5) Working Pitch Circle Diameter (in mm) (8) Maximum Feed-Force (9) Maximum Driving Torque

Pinion with Helical Teeth
(Interface : Keyway)

Table 6. The max. permitted torque and feed-force of pinion with Keyway

Pinion \ Rack			Quality	Q4	Q5	Q5+	Q6	Q6M	Q8H	Q8	Q9	Q10
			Material	Carbon Steel	Carbon Steel	Carbon Steel	Carbon Steel	Carbon Steel	Q&T Alloy Steel	Carbon Steel	Stainless Steel	Carbon Steel
			Heat Treatment	Induction Hardening	Induction Hardening	Induction Hardening	Induction Hardening	Induction Hardening	Quenched Tempered	Normaliz-ing	Solution	Induction Hardening
Mn	z(1)	dw(5)	Max. Torque * and Feed-Force									
4	15	63.662	F_{2T}(8) (N)		32,201	32,201	32,201	32,201	13,038	5,027		13,509
			T_{2B}(9) (Nm)		1,025	1,025	1,025	1,025	415	160		430
	18	76.394	F_{2T}(8) (N)		34,557	34,557	34,557	34,557	18,850	8,639		18,457
			T_{2B}(9) (Nm)		1,320	1,320	1,320	1,320	720	330		705
	20	84.883	F_{2T}(8) (N)		30,159	30,159	30,159	30,159	12,959	4,830		14,962
			T_{2B}(9) (Nm)		1,280	1,280	1,280	1,280	550	205		635
	21	89.127	F_{2T}(8) (N)		30,294	30,294	30,182	30,182	14,362	5,610		14,810
			T_{2B}(9) (Nm)		1,350	1,350	1,345	1,345	640	250		660
	22	93.371	F_{2T}(8) (N)		30,309	30,309	30,202	30,202	15,851	6,533		14,780
			T_{2B}(9) (Nm)		1,415	1,415	1,410	1,410	740	305		690
	24	101.859	F_{2T}(8) (N)		30,434	30,434	30,238	30,238	18,850	8,443		14,530
			T_{2B}(9) (Nm)		1,550	1,550	1,540	1,540	960	430		740
	25	106.103	F_{2T}(8) (N)		30,442	30,442	30,253	30,253	19,321	9,425		14,514
			T_{2B}(9) (Nm)		1,615	1,615	1,605	1,605	1,025	500		770
5	18	95.493	F_{2T}(8) (N)	54,140	54,140	54,140	54,035	54,035		18,012		35,081
			T_{2B}(9) (Nm)	2,585	2,585	2,585	2,580	2,580		860		1,575
	24	127.324	F_{2T}(8) (N)	48,538	48,538	48,538	48,538	48,538		18,064		28,588
			T_{2B}(9) (Nm)	3,090	3,090	3,090	3,090	3,090		1,150		1,820
6	20	127.324	F_{2T}(8) (N)	69,036	69,036	69,036	69,036	69,036		21,756		47,359
			T_{2B}(9) (Nm)	4,395	4,395	4,395	4,395	4,395		1,385		3,015
	25	159.155	F_{2T}(8) (N)	72,131	72,131	72,131	72,068	72,068		33,552		49,574
			T_{2B}(9) (Nm)	5,740	5,740	5,740	5,735	5,735		2,670		3,945
8	18	152.789	F_{2T}(8) (N)	134,368	134,368		134,368	134,368		62,832		99,876
			T_{2B}(9) (Nm)	10,265	10,265		10,265	10,265		4,800		7,630
	20	169.766	F_{2T}(8) (N)	126,527	126,527		126,527	126,527		46,122		93,423
			T_{2B}(9) (Nm)	10,740	10,740		10,740	10,740		3,915		7,930
10	20	212.207	F_{2T}(8) (N)	193,490	193,490		193,443	193,443		85,812		143,492
			T_{2B}(9) (Nm)	20,530	20,530		20,525	20,525		9,105		15,225

* The Maximal Driving Torque is also to be understood as the Maximal Acceleration Torque T_{2B}.
The Emergency Stop Torque $T_{2NOT} = 2 \times T_{2B}$, under the condition limited 1000 times in the whole service period.

(1) Number of Teeth (5) Working Pitch Circle Diameter (in mm) (8) Maximum Feed-Force (9) Maximum Driving Torque

Pinion with Helical Teeth

(Interface : Long Shaft Pinion with Keyway for Hollow-Shaft)

Quality DIN 5
Tooth Thickness Tolerance : e25
Left-Hand Helical Teeth
Case-Hardened and Teeth Ground

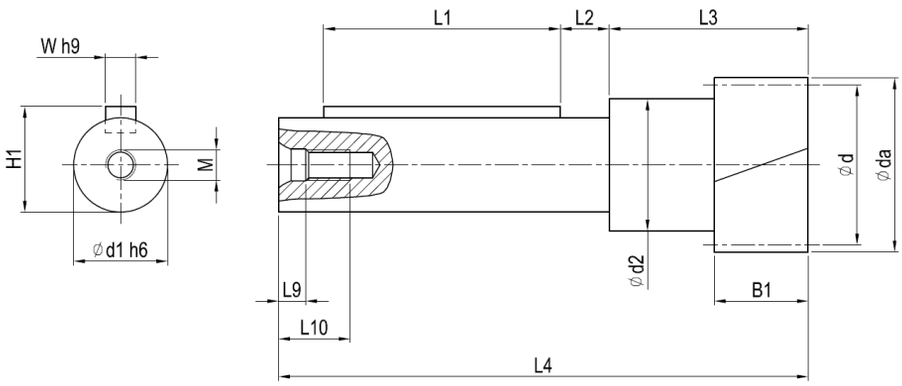

Mn.	z(1)	x(2)	da(3)	d(4)	dw(5)	d1 h6	d2	B1	L1	L2	L3	L4	M	L9	L10	W h9	H1	L(6)	Order Code
1.5	20	0	34.831	31.831	31.831	20	26	20	40	7.5	45	100	M5	4.8	12.5	6	22.5	100	G1JL20D20
2	15	0.417	37.5	31.831	33.5	20	24	25	28	13.5	50	105	M5	4.8	12.5	6	22.5	100	G02L15D20
	20	0	46.441	42.441	42.441	25	35	25	63	13	53	141	M8	7.2	19	8	28	133.332	G02L20D25
	30	0	67.662	63.662	63.662	25	38	25	63	13	53	141	M8	7.2	19	8	28	200	G02L30D25
	30	0	67.662	63.662	63.662	28	42	25	80	14.5	57.5	166	M8	7.2	19	8	31	200	G02L30D28
	30	0	67.662	63.662	63.662	36	48	25	100	12.5	57	181	M12	10	28	10	39	200	G02L30D36
3	20	0	69.662	63.662	63.662	25	38	30	63	13	55	143	M8	7.2	19	8	28	200	G03L20D25
	20	0	69.662	63.662	63.662	28	42	30	80	14.5	60	168	M8	7.2	19	8	31	200	G03L20D28
	20	0	69.662	63.662	63.662	36	48	30	100	12.5	62	186	M12	10	28	10	39	200	G03L20D36
4	15	0	71.662	63.662	63.662	28	42	40	80	14.5	65	173	M8	7.2	19	8	31	200	G04L15D28
	15	0	71.662	63.662	63.662	36	48	40	100	12.5	67	191	M12	10	28	10	39	200	G04L15D36
	15	0	71.662	63.662	63.662	48	57	40	125	9	72	216	M12	10	28	14	51.5	200	G04L15D48
	30	0	135.325	127.324	127.324	48	57	40	125	9	72	216	M12	10	28	14	51.5	400	G04L30D48
5	12	0.434	78.002	63.662	68	48	57	50	125	9	82	226	M12	10	28	14	51.5	200	G05L12D48
	15	0.5	94.578	79.578	84.578	60	68	50	150	10	90	272	M16	12	36	18	64	250	G05L15D60
6	13	0.5	100.761	82.761	88.761	60	70	60	150	10	100	282	M16	12	36	18	64	260	G06L13D60

(1) Number of teeth (2) Profile modification factor (3) Diameter of addendum circle (4) Pitch circle diameter
(5) Working pitch circle diameter (6) Pitch circle length $L = \pi \times d$

Pinion with Helical Teeth

(Interface : Long Shaft Pinion with Keyway for Hollow-Shaft)

Quality DIN 5
Tooth Thickness Tolerance : e25
Left-Hand Helical Teeth
Case-Hardened and Teeth Ground

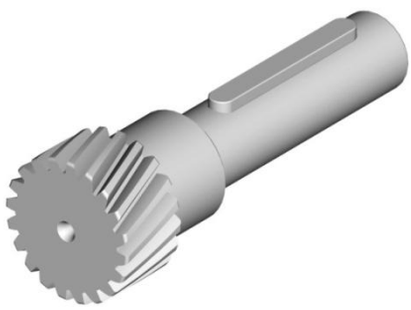

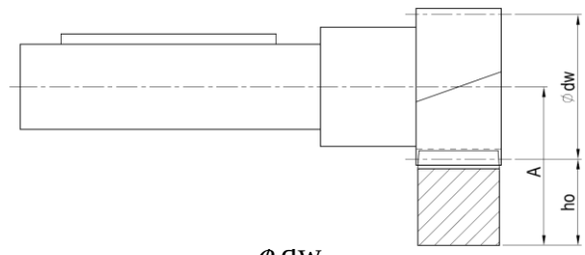

$$A = ho + \frac{\varphi dw}{2}$$

In table 7, the maximum permissible torque of pinion with Long Shaft, and the rack is calculated on the basis of a speed of 1.5 m/s and providing good lubrication (using an automatic lubrication system or manually applied grease every day), the tooth root strength factor $S_F \geqq 1.4$, tooth surface strength coefficient $S_H \geqq 1$, the safety factor $S_B \fallingdotseq 1$, and the required service life of 20,000 hours. By higher speed, the max. permissible torque reduced. The user needs to increase the safety factor for the application.
Backlash changes by different center height. Please contact APEX under WWW.APEXDYNA.COM.

Table 7, the max. permitted torque and feed-force of pinion with Long Shaft

Pinion \ Rack			Quality	Q4	Q5	Q5+	Q6	Q6M	Q8H	Q8	Q9	Q10
			Material	Carbon Steel	Carbon Steel	Carbon Steel	Carbon Steel	Carbon Steel	Q&T Alloy Steel	Carbon Steel	Stainless Steel	Carbon Steel
			Heat Treatment	Induction Hardening	Induction Hardening	Induction Hardening	Induction Hardening	Induction Hardening	Quenched Tempered	Normaliz-ing	Solution	Induction Hardening
Mn	z(1)	dw(5)	Max. Torque * and Feed-Force									
1.5	20	31.83	F_{2T}(8) (N)				5,027			628		1,257
			T_{2B}(9) (Nm)				80			10		20
2	15	33.50	F_{2T}(8) (N)		8,796		8,168	8,168	1885	1,257		2,199
			T_{2B}(9) (Nm)		140		130	130	30	20		35
	20	42.44	F_{2T}(8) (N)		8,718		8,247	8,247	2,121	1,414		2,356
			T_{2B}(9) (Nm)		185		175	175	45	30		50
	30	63.66	F_{2T}(8) (N)		8,954		8,325	8,325	4,555	2,199		2,199
			T_{2B}(9) (Nm)		285		265	265	145	70		70
3	20	63.66	F_{2T}(8) (N)		16,807	16,807	16,493	16,493	5,341	2,356		8,796
			T_{2B}(9) (Nm)		535	535	525	525	170	75		280
4	15	63.66	F_{2T}(8) (N)		32,201	32,201	32,201	32,201	13,038	5,027		13,509
			T_{2B}(9) (Nm)		1,025	1,025	1,025	1,025	415	160		430
	30	127.32	F_{2T}(8) (N)		30,473	30,473	30,159	30,159	19,007	11,310		13,666
			T_{2B}(9) (Nm)		1,940	1,940	1,920	1,920	1,210	720		870
5	12	68.00	F_{2T}(8) (N)	28,117	28,117	28,117	27,018	27,018		4,241		5,027
			T_{2B}(9) (Nm)	895	895	895	860	860		135		160
	15	84.58	F_{2T}(8) (N)	34,809	34,809	34,809	34,557	34,557		6,911		10,933
			T_{2B}(9) (Nm)	1,385	1,385	1,385	1,375	1,375		275		435
6	13	88.76	F_{2T}(8) (N)	38,907	38,907	38,907	38,182	38,182		9,425		10,875
			T_{2B}(9) (Nm)	1,610	1,610	1,610	1,580	1,580		390		450

* The Maximal Driving Torque is also to be understood as the Maximal Acceleration Torque T_{2B}.
The Emergency Stop Torque $T_{2NOT} = 2 \times T_{2B}$, under the condition limited 1000 times in the whole service period.

(1) Number of Teeth (5) Working Pitch Circle Diameter (in mm) (8) Maximum Feed-Force (9) Maximum Driving Torque

Pinion with Helical Teeth

(Interface : Long Shaft Pinion without Keyway for Hollow-Shaft)

Quality DIN 5
Tooth Thickness Tolerance : e25
Left-Hand Helical Teeth
Case-Hardened and Teeth Ground

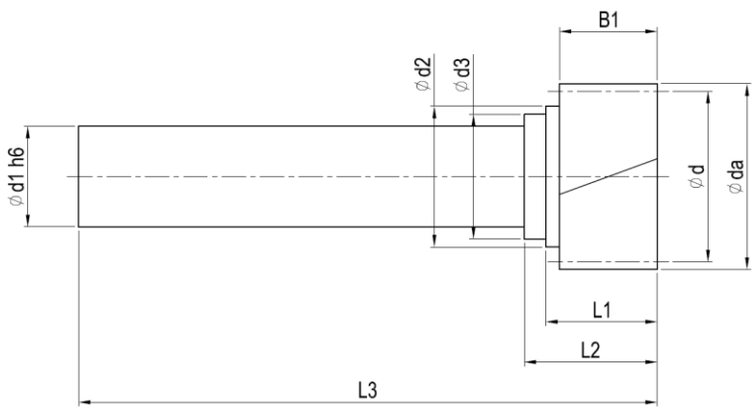

Mn.	z(1)	x(2)	da(3)	d(4)	dw(5)	d1 h6	d2	d3	B1	L1	L2	L3	L(6)	Order Code
1.5	20	0	34.831	31.831	31.831	20	26	-	20	26	-	100.25	100	H1JL20D20
2	15	0.4172	37.5	31.831	33.5	20	24	-	25	31	-	105	100	H02L15D20
	20	0	46.441	42.441	42.441	25	35	31	25	28.5	34	148	133.332	H02L20D25
	30	0	67.662	63.662	63.662	25	38	31	25	28.5	34	148	200	H02L30D25
	30	0	67.662	63.662	63.662	28	42	36	25	33	38.5	180	200	H02L30D28
	30	0	67.662	63.662	63.662	36	48	-	25	32.5	-	203	200	H02L30D36
3	20	0	69.662	63.662	63.662	25	31	-	30	36.5	-	150	200	H03L20D25
	20	0	69.662	63.662	63.662	28	42	36	30	35.5	41	183	200	H03L20D28
	20	0	69.662	63.662	63.662	36	48	-	30	37.5	-	208	200	H03L20D36
4	15	0	71.662	63.662	63.662	28	36	-	40	46	-	188	200	H04L15D28
	15	0	71.662	63.662	63.662	36	48	-	40	42.5	-	213	200	H04L15D36
	15	0	71.662	63.662	63.662	48	57	-	40	43.5	-	240	200	H04L15D48
	30	0	135.325	127.324	127.324	48	57	-	40	43.5	-	240	400	H04L30D48
5	12	0.434	78.002	63.662	68	48	57	-	50	53.5	-	250	200	H05L12D48
	15	0.5	94.578	79.578	84.578	60	70	-	50	55	-	275	250	H05L15D60
6	13	0.5	100.761	82.761	88.761	48	57	-	60	63.5	-	260	260	H06L13D48
	13	0.5	100.761	82.761	88.761	60	70	-	60	65	-	285	260	H06L13D60
	15	0.5	113.493	95.493	101.493	60	70	-	60	65	-	285	300	H06L15D60

(1) Number of teeth (2) Profile modification factor (3) Diameter of addendum circle (4) Pitch circle diameter
(5) Working pitch circle diameter (6) Pitch circle length $L = \pi \times d$

Pinion with Helical Teeth

(Interface : Long Shaft Pinion without Keyway for Hollow-Shaft)

Quality DIN 5
Tooth Thickness Tolerance : e25
Left-Hand Helical Teeth
Case-Hardened and Teeth Ground

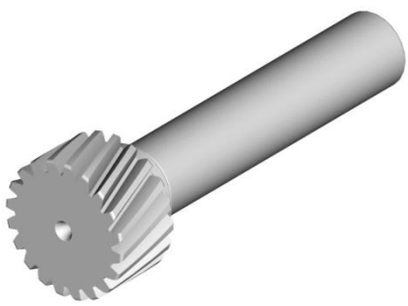

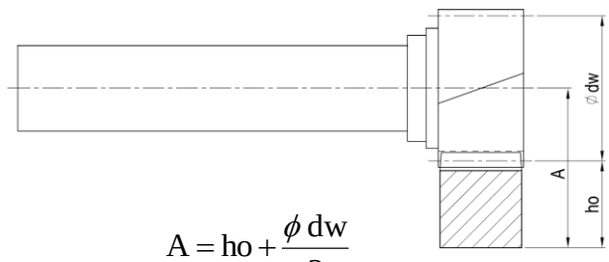

$$A = ho + \frac{\phi\, dw}{2}$$

In table 8, the maximum permissible torque of pinion with Long Shaft, and the rack is calculated on the basis of a speed of 1.5 m/s and providing good lubrication (using an automatic lubrication system or manually applied grease every day), the tooth root strength factor $S_F \geqq 1.4$, tooth surface strength coefficient $S_H \geqq 1$, the safety factor $S_B \fallingdotseq 1$, and the required service life of 20,000 hours. By higher speed, the max. permissible torque reduced. The user needs to increase the safety factor for the application.
Backlash changes by different center height. Please contact APEX under WWW.APEXDYNA.COM.

Table 8, the max. permitted torque and feed-force of pinion with Long Shaft

Pinion \ Rack			Quality	Q4	Q5	Q5+	Q6	Q6M	Q8H	Q8	Q9	Q10
			Material	Carbon Steel	Carbon Steel	Carbon Steel	Carbon Steel	Carbon Steel	Q&T Alloy Steel	Carbon Steel	Stainless Steel	Carbon Steel
			Heat Treatment	Induction Hardening	Induction Hardening	Induction Hardening	Induction Hardening	Induction Hardening	Quenched Tempered	Normaliz-ing	Solution	Induction Hardening
Mn	z(1)	dw(5)	Max. Torque * and Feed-Force									
1.5	20	31.83	F_{2T}(8) (N)				5,027			628		1,257
			T_{2B}(9)(Nm)				80			10		20
2	15	33.50	F_{2T}(8) (N)		8,796		8,168	8,168	1885	1,257		2,199
			T_{2B}(9)(Nm)		140		130	130	30	20		35
	20	42.44	F_{2T}(8) (N)		8,718		8,247	8,247	2,121	1,414		2,356
			T_{2B}(9)(Nm)		185		175	175	45	30		50
	30	63.66	F_{2T}(8) (N)		8,954		8,325	8,325	4,555	2,199		2,199
			T_{2B}(9)(Nm)		285		265	265	145	70		70
3	20	63.66	F_{2T}(8) (N)		16,807	16,807	16,493	16,493	5,341	2,356		8,796
			T_{2B}(9)(Nm)		535	535	525	525	170	75		280
4	15	63.66	F_{2T}(8) (N)		32,201	32,201	32,201	32,201	13,038	5,027		13,509
			T_{2B}(9)(Nm)		1,025	1,025	1,025	1,025	415	160		430
	30	127.32	F_{2T}(8) (N)		30,473	30,473	30,159	30,159	19,007	11,310		13,666
			T_{2B}(9)(Nm)		1,940	1,940	1,920	1,920	1,210	720		870
5	12	68.00	F_{2T}(8) (N)	28,117	28,117	28,117	27,018	27,018		4,241		5,027
			T_{2B}(9)(Nm)	895	895	895	860	860		135		160
	15	84.58	F_{2T}(8) (N)	34,809	34,809	34,809	34,557	34,557		6,911		10,933
			T_{2B}(9)(Nm)	1,385	1,385	1,385	1,375	1,375		275		435
6	13	88.76	F_{2T}(8) (N)	38,907	38,907	38,907	38,182	38,182		9,425		10,875
			T_{2B}(9)(Nm)	1,610	1,610	1,610	1,580	1,580		390		450
	15	101.49		45,971	45,971	45,971	45,867	45,867		13,823		17,698
				2,195	2,195	2,195	2,190	2,190		660		845

* The Maximal Driving Torque is also to be understood as the Maximal Acceleration Torque T_{2B}.
The Emergency Stop Torque $T_{2NOT} = 2 \times T_{2B}$, under the condition limited 1000 times in the whole service period.

(1) Number of Teeth (5) Working Pitch Circle Diameter (in mm) (8) Maximum Feed-Force (9) Maximum Driving Torque

Rack with Straight Teeth

Quality 4 / Carbon Steel
Tooth Thickness Tolerance : -13 ~ 0 μm
Straight Teeth
Teeth Induction Hardened and Ground
All Sides Ground

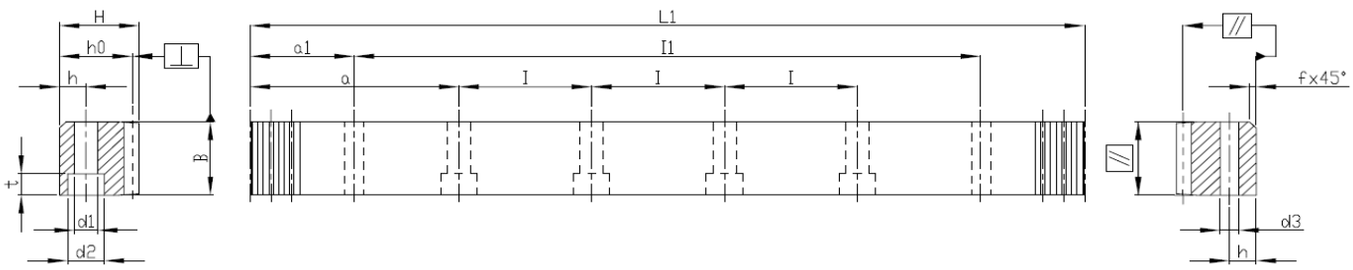

Mn	Pt(1)	L1	Teeth No.	B	H	ho	f	a	l	Hole No.	h	d1	d2	t	a1	l1	d3	f_p(2)	F_p(3)	Order Code *
5	15.70796	1005.31	64	49	39	34	3	62.83	125.66	8	12	14	20	13	30.10	945.11	11.7	0.005	0.02	05041100C10
6	18.84956	1017.88	54	59	49	43	3	63.62	127.23	8	16	18	26	17	31.40	955.08	15.7	0.005	0.02	06041100C10
8	25.13274	1005.31	40	79	79	71	3	62.83	125.66	8	25	22	33	21	26.60	952.11	19.7	0.006	0.022	08041100C10
10	31.41593	1005.31	32	99	99	89	3	62.83	125.66	8	32	33	48	32	125.66	753.99	19.7	0.006	0.022	10041100C10
12	37.69911	1017.88	27	120	120	108	3	63.62	127.23	8	40	39	58	38	127.23	763.42	19.7	0.007	0.023	12041100C10

(1) Teeth Pitch Pt = Module x π (2) fp = Single Pitch Error (3) Fp = Total Pitch Error

∗ For all models APEX also provides Rack without screw-holes. By ordering please change the 2nd last order-code position from "1" to "0". Please also refer to page 14.

Rack with Straight Teeth

Quality 5 / Carbon Steel
Tooth Thickness Tolerance : -15 ~ 0 μm
Straight Teeth
Teeth Induction Hardened and Ground
All Sides Ground

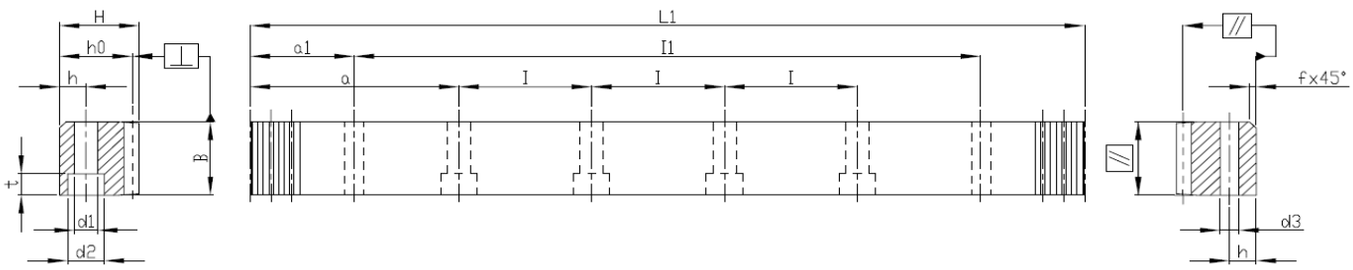

Mn	Pt(1)	L1	Teeth No.	B	H	ho	f	a	l	Hole No.	h	d1	D2	T	a1	l1	d3	f_p(2)	F_p(3)	Order Code *
2	6.28319	251.33	40	24	24	22	2	62.83	125.66	2	8	7	11	7	31.3	188.73	5.7	0.005	0.018	02051025C10
2	6.28319	502.66	80	24	24	22	2	62.83	125.66	4	8	7	11	7	31.3	440.06	5.7	0.0055	0.021	02051050C10
2	6.28319	1005.31	160	24	24	22	2	62.83	125.66	8	8	7	11	7	31.3	942.71	5.7	0.006	0.024	02051100C10
3	9.42478	254.47	27	29	29	26	2	63.62	127.23	2	9	10	15	9	34.4	185.67	7.7	0.0055	0.019	03051025C10
3	9.42478	508.94	54	29	29	26	2	63.62	127.23	4	9	10	15	9	34.4	440.14	7.7	0.006	0.023	03051050C10
3	9.42478	1017.88	108	29	29	26	2	63.62	127.23	8	9	10	15	9	34.4	949.08	7.7	0.006	0.026	03051100C10

(1) Teeth Pitch Pt = Module x π (2) fp = Single Pitch Error (3) Fp = Total Pitch Error

∗ For all models APEX also provides Rack without screw-holes. By ordering please change the 2nd last order-code position from "1" to "0". Please also refer to page 14.

Quality 5 / Carbon Steel

Tooth Thickness Tolerance : -15 ~ 0 μm
Straight Teeth
Teeth Induction Hardened and Ground
All Sides Ground

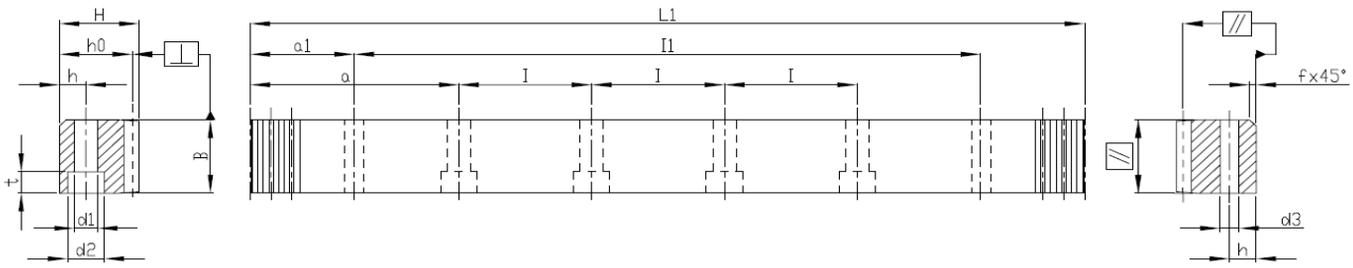

Mn	Pt(1)	L1	Teeth No.	B	H	ho	f	a	l	Hole No.	h	d1	d2	t	a1	l1	d3	f_p(2)	F_p(3)	Order Code *
4	12.56637	251.33	20	39	39	35	3	62.83	125.66	2	12	10	15	9	37.5	176.33	7.7	0.006	0.021	04051025C10
4	12.56637	502.66	40	39	39	35	3	62.83	125.66	4	12	10	15	9	37.5	427.66	7.7	0.007	0.026	04051050C10
4	12.56637	1005.31	80	39	39	35	3	62.83	125.66	8	12	10	15	9	37.5	930.31	7.7	0.007	0.028	04051100C10
4	12.56637	1005.31	80	39	39	35	3	62.83	125.66	8	12	14	20	13	37.5	930.31	11.7	0.007	0.028	04051100CS0
4	12.56637	1256.64	100	39	39	35	3	62.83	125.66	10	12	10	15	9	37.5	1181.64	7.7	0.007	0.028	04051125C10
4	12.56637	1507.96	120	39	39	35	3	62.83	125.66	12	12	10	15	9	37.5	1432.96	7.7	0.007	0.028	04051150C10
4	12.56637	1507.96	120	39	39	35	3	62.83	125.66	12	12	14	20	13	37.5	1432.96	11.7	0.007	0.028	04051150CS0
4	12.56637	1759.29	140	39	39	35	3	62.83	125.66	14	12	10	15	9	37.5	1684.29	7.7	0.007	0.028	04051175C10
4	12.56637	2010.62	160	39	39	35	3	62.83	125.66	16	12	10	15	9	37.5	1935.62	7.7	0.008	0.032	04051200C10
4	12.56637	2010.62	160	39	39	35	3	62.83	125.66	16	12	14	20	13	37.5	1935.62	11.7	0.008	0.032	04051200CS0
5	15.70796	1005.31	64	49	39	34	3	62.83	125.66	8	12	14	20	13	30.1	945.11	11.7	0.007	0.028	05051100C10
6	18.84956	1017.88	54	59	49	43	3	63.62	127.23	8	16	18	26	17	31.4	955.08	15.7	0.007	0.028	06051100C10
8	25.13274	1005.31	40	79	79	71	3	62.83	125.66	8	25	22	33	21	26.6	952.11	19.7	0.008	0.031	08051100C10
10	31.41593	1005.31	32	99	99	89	3	62.83	125.66	8	32	33	48	32	125.66	753.99	19.7	0.008	0.031	10051100C10
12	37.69911	1017.88	27	120	120	108	3	63.62	127.23	8	40	39	58	38	127.23	763.42	19.7	0.01	0.033	12051100C10

(1) Teeth Pitch Pt = Module x π (2) fp = Single Pitch Error (3) Fp = Total Pitch Error

∗ For all models APEX also provides Rack without screw-holes. By ordering please change the 2nd last order-code position from "1" to "0". Please also refer to page 14.

Rack with Straight Teeth

Quality 6 / Carbon Steel
Tooth Thickness Tolerance : -22 ~ 0 μm
Straight Teeth
Teeth Induction Hardened and Ground
All Sides Ground

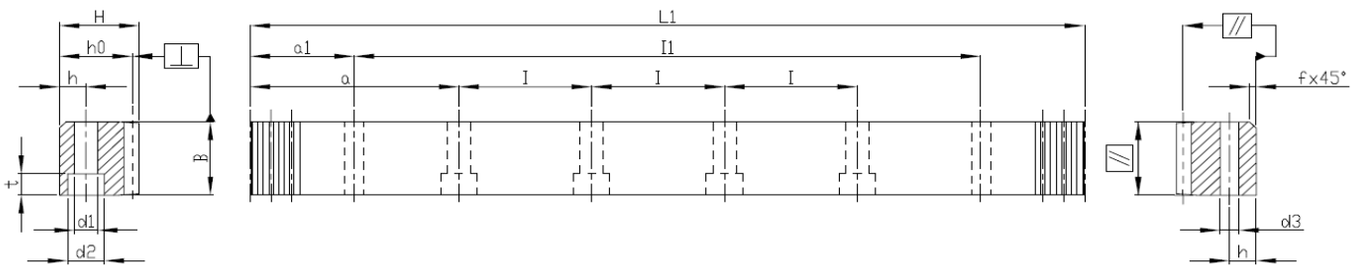

Mn	Pt(1)	L1	Teeth No.	B	H	ho	f	a	l	Hole No.	h	d1	d2	t	a1	l1	d3	f_p(2)	F_p(3)	Order Code *
1	3.14159	502.66	160	15	15	14	2	62.85	125.66	4	6	5	8	5	31.3	440.05	5.7	0.008	0.029	01061050C10
1	3.14159	1005.31	320	15	15	14	2	62.85	125.66	8	6	5	8	5	31.3	942.71	5.7	0.008	0.033	01061100C10
1	3.14159	1507.96	480	15	15	14	2	62.85	125.66	12	6	5	8	5	31.3	1445.36	5.7	0.008	0.033	01061150C10
2	6.28319	502.66	80	24	24	22	2	62.83	125.66	4	8	7	11	7	31.3	440.06	5.7	0.008	0.029	02061050C10
2	6.28319	1005.31	160	24	24	22	2	62.83	125.66	8	8	7	11	7	31.3	942.71	5.7	0.008	0.034	02061100C10
2	6.28319	1256.64	200	24	24	22	2	62.83	125.66	10	8	7	11	7	31.3	1194.04	5.7	0.008	0.034	02061125C10
2	6.28319	1507.96	240	24	24	22	2	62.83	125.66	12	8	7	11	7	31.3	1445.36	5.7	0.008	0.034	02061150C10
2	6.28319	1759.29	280	24	24	22	2	62.83	125.66	14	8	7	11	7	31.3	1696.69	5.7	0.008	0.034	02061175C10
2	6.28319	2010.62	320	24	24	22	2	62.83	125.66	16	8	7	11	7	31.3	1948.02	5.7	0.009	0.038	02061200C10
3	9.42478	508.94	54	29	29	26	2	63.62	127.23	4	9	10	15	9	34.4	440.14	7.7	0.008	0.032	03061050C10
3	9.42478	1017.88	108	29	29	26	2	63.62	127.23	8	9	10	15	9	34.4	949.08	7.7	0.009	0.037	03061100C10
3	9.42478	1272.35	135	29	29	26	2	63.62	127.23	10	9	10	15	9	34.4	1203.55	7.7	0.009	0.037	03061125C10
3	9.42478	1526.81	162	29	29	26	2	63.62	127.23	12	9	10	15	9	34.4	1458.01	7.7	0.009	0.037	03061150C10
3	9.42478	1781.28	189	29	29	26	2	63.62	127.23	14	9	10	15	9	34.4	1712.48	7.7	0.009	0.037	03061175C10
3	9.42478	2035.75	216	29	29	26	2	63.62	127.23	16	9	10	15	9	34.4	1966.952	7.7	0.01	0.042	03061200C10
4	12.56637	502.66	40	39	39	35	3	62.83	125.66	4	12	10	15	9	37.5	427.66	7.7	0.009	0.034	04061050C10
4	12.56637	502.66	40	39	39	35	3	62.83	125.66	4	12	14	20	13	37.5	427.66	11.7	0.009	0.034	04061050CS0
4	12.56637	1005.31	80	39	39	35	3	62.83	125.66	8	12	10	15	9	37.5	930.31	7.7	0.01	0.04	04061100C10
4	12.56637	1005.31	80	39	39	35	3	62.83	125.66	8	12	14	20	13	37.5	930.31	11.7	0.01	0.04	04061100CS0
4	12.56637	1256.64	100	39	39	35	3	62.83	125.66	10	12	10	15	9	37.5	1181.64	7.7	0.01	0.04	04061125C10
4	12.56637	1507.96	120	39	39	35	3	62.83	125.66	12	12	10	15	9	37.5	1432.96	7.7	0.01	0.04	04061150C10
4	12.56637	1507.96	120	39	39	35	3	62.83	125.66	12	12	14	20	13	37.5	1432.96	11.7	0.01	0.04	04061150CS0
4	12.56637	1759.29	140	39	39	35	3	62.83	125.66	14	12	10	15	9	37.5	1684.29	7.7	0.01	0.04	04061175C10
4	12.56637	2010.62	160	39	39	35	3	62.83	125.66	16	12	10	15	9	37.5	1935.62	7.7	0.011	0.045	04061200C10
4	12.56637	2010.62	160	39	39	35	3	62.83	125.66	16	12	14	20	13	37.5	1935.62	11.7	0.011	0.045	04061200CS0

(1) Teeth Pitch Pt = Module x π (2) fp = Single Pitch Error (3) Fp = Total Pitch Error

∗ For all models APEX also provides Rack without screw-holes. By ordering please change the 2nd last order-code position from "1" to "0". Please also refer to page 14.

Quality 6 / Carbon Steel

Tooth Thickness Tolerance : -22 ~ 0 μm
Straight Teeth
Teeth Induction Hardened and Ground
All Sides Ground

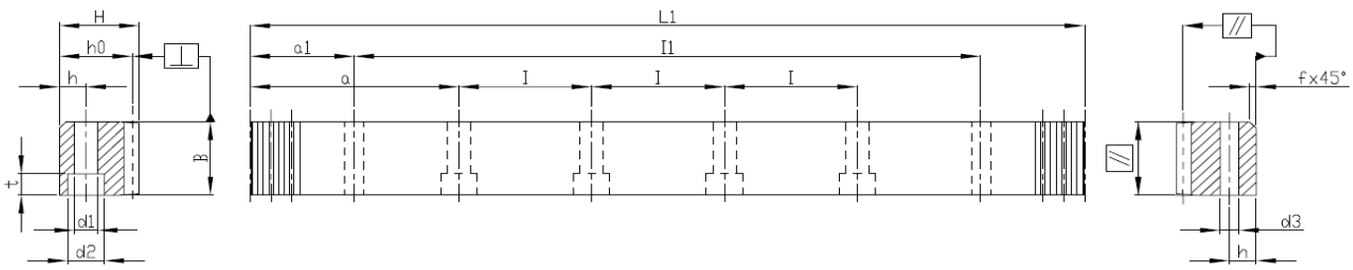

Mn	Pt(1)	L1	Teeth No.	B	H	ho	f	a	l	Hole No.	h	d1	d2	t	a1	l1	d3	f_p(2)	F_p(3)	Order Code *
5	15.70796	502.66	32	49	39	34	3	62.83	125.66	4	12	14	20	13	30.1	442.46	11.7	0.009	0.034	05061050C10
5	15.70796	1005.31	64	49	39	34	3	62.83	125.66	8	12	14	20	13	30.1	945.11	11.7	0.01	0.04	05061100C10
5	15.70796	1256.64	80	49	39	34	3	62.83	125.66	10	12	14	20	13	30.1	1196.44	11.7	0.01	0.04	05061125C10
5	15.70796	1507.96	96	49	39	34	3	62.83	125.66	12	12	14	20	13	30.1	1447.76	11.7	0.01	0.04	05061150C10
5	15.70796	1759.29	112	49	39	34	3	62.83	125.66	14	12	14	20	13	30.1	1699.09	11.7	0.01	0.04	05061175C10
5	15.70796	2010.62	128	49	39	34	3	62.83	125.66	16	12	14	20	13	30.1	1950.42	11.7	0.011	0.045	05061200C10
6	18.84956	508.94	27	59	49	43	3	63.62	127.23	4	16	18	26	17	31.4	446.14	15.7	0.009	0.034	06061050C10
6	18.84956	1017.88	54	59	49	43	3	63.62	127.23	8	16	18	26	17	31.4	955.08	15.7	0.01	0.04	06061100C10
6	18.84956	1281.77	68	59	49	43	3	63.62	127.23	10	16	18	26	17	31.4	1218.97	15.7	0.01	0.04	06061125C10
6	18.84956	1526.81	81	59	49	43	3	63.62	127.23	12	16	18	26	17	31.4	1464.01	15.7	0.01	0.04	06061150C10
6	18.84956	1790.71	95	59	49	43	3	63.62	127.23	14	16	18	26	17	31.4	1727.91	15.7	0.01	0.04	06061175C10
6	18.84956	2035.75	108	59	49	43	3	63.62	127.23	16	16	18	26	17	31.4	1972.95	15.7	0.011	0.045	06061200C10
8	25.13274	502.66	20	79	79	71	3	62.83	125.66	4	25	22	33	21	26.6	449.46	19.7	0.011	0.037	08061050C10
8	25.13274	1005.31	40	79	79	71	3	62.83	125.66	8	25	22	33	21	26.6	952.11	19.7	0.011	0.043	08061100C10
8	25.13274	1256.64	50	79	79	71	3	62.83	125.66	10	25	22	33	21	26.6	1203.44	19.7	0.011	0.043	08061125C10
8	25.13274	1507.96	60	79	79	71	3	62.83	125.66	12	25	22	33	21	26.6	1454.76	19.7	0.011	0.043	08061150C10
8	25.13274	1759.29	70	79	79	71	3	62.83	125.66	14	25	22	33	21	26.6	1706.09	19.7	0.011	0.043	08061175C10
8	25.13274	2010.62	80	79	79	71	3	62.83	125.66	16	25	22	33	21	26.6	1957.42	19.7	0.012	0.048	08061200C10
10	31.41593	1005.31	32	99	99	89	3	62.83	125.66	8	32	33	48	32	125.66	753.99	19.7	0.011	0.043	10061100C10
12	37.69911	1017.88	27	120	120	108	3	63.62	127.23	8	40	39	58	38	127.23	763.42	19.7	0.013	0.046	12061100C10

(1) Teeth Pitch Pt = Module x π (2) fp ＝Single Pitch Error (3) Fp＝Total Pitch Error

∗ For all models APEX also provides Rack without screw-holes. By ordering please change the 2nd last order-code position from "1" to "0". Please also refer to page 14.

Rack with Straight Teeth

Quality 6M / Carbon Steel
Tooth Thickness Tolerance : -33 ~ 0 μm
Straight Teeth
Teeth Induction Hardened and Ground
All Sides Milled

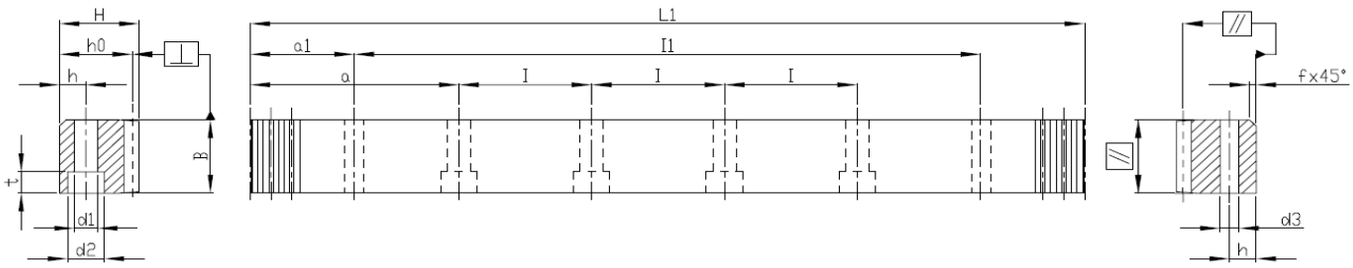

Mn	Pt(1)	L1	Teeth No.	B	H	ho	f	a	l	Hole No.	h	d1	d2	t	a1	l1	D3	f_p(2)	F_p(3)	Order Code *
1	3.14159	502.66	160	15	15	14	2	62.85	125.66	4	6	5	8	5	31.3	440.05	5.7	0.008	0.029	016M1050C10
1	3.14159	1005.31	320	15	15	14	2	62.85	125.66	8	6	5	8	5	31.3	942.71	5.7	0.008	0.033	016M1100C10
1	3.14159	1507.96	480	15	15	14	2	62.85	125.66	12	6	5	8	5	31.3	1445.36	5.7	0.008	0.033	016M1150C10
2	6.28319	502.66	80	24	24	22	2	62.83	125.66	4	8	7	11	7	31.3	440.06	5.7	0.008	0.029	026M1050C10
2	6.28319	1005.31	160	24	24	22	2	62.83	125.66	8	8	7	11	7	31.3	942.71	5.7	0.008	0.034	026M1100C10
2	6.28319	1256.64	200	24	24	22	2	62.83	125.66	10	8	7	11	7	31.3	1194.04	5.7	0.008	0.034	026M1125C10
2	6.28319	1507.96	240	24	24	22	2	62.83	125.66	12	8	7	11	7	31.3	1445.36	5.7	0.008	0.034	026M1150C10
2	6.28319	1759.29	280	24	24	22	2	62.83	125.66	14	8	7	11	7	31.3	1696.69	5.7	0.008	0.034	026M1175C10
2	6.28319	2010.62	320	24	24	22	2	62.83	125.66	16	8	7	11	7	31.3	1948.02	5.7	0.009	0.038	026M1200C10
3	9.42478	508.94	54	29	29	26	2	63.62	127.23	4	9	10	15	9	34.4	440.14	7.7	0.008	0.032	036M1050C10
3	9.42478	1017.88	108	29	29	26	2	63.62	127.23	8	9	10	15	9	34.4	949.08	7.7	0.009	0.037	036M1100C10
3	9.42478	1272.35	135	29	29	26	2	63.62	127.23	10	9	10	15	9	34.4	1203.55	7.7	0.009	0.037	036M1125C10
3	9.42478	1526.81	162	29	29	26	2	63.62	127.23	12	9	10	15	9	34.4	1458.01	7.7	0.009	0.037	036M1150C10
3	9.42478	1781.28	189	29	29	26	2	63.62	127.23	14	9	10	15	9	34.4	1712.48	7.7	0.009	0.037	036M1175C10
3	9.42478	2035.75	216	29	29	26	2	63.62	127.23	16	9	10	15	9	34.4	1966.952	7.7	0.01	0.042	036M1200C10
4	12.56637	502.66	40	39	39	35	3	62.83	125.66	4	12	10	15	9	37.5	427.66	7.7	0.009	0.034	046M1050C10
4	12.56637	502.66	40	39	39	35	3	62.83	125.66	4	12	14	20	13	37.5	427.66	11.7	0.009	0.034	046M1050CS0
4	12.56637	1005.31	80	39	39	35	3	62.83	125.66	8	12	10	15	9	37.5	930.31	7.7	0.01	0.04	046M1100C10
4	12.56637	1005.31	80	39	39	35	3	62.83	125.66	8	12	14	20	13	37.5	930.31	11.7	0.01	0.04	046M1100CS0
4	12.56637	1256.64	100	39	39	35	3	62.83	125.66	10	12	10	15	9	37.5	1181.64	7.7	0.01	0.04	046M1125C10
4	12.56637	1507.96	120	39	39	35	3	62.83	125.66	12	12	10	15	9	37.5	1432.96	7.7	0.01	0.04	046M1150C10
4	12.56637	1759.29	140	39	39	35	3	62.83	125.66	14	12	10	15	9	37.5	1684.29	7.7	0.01	0.04	046M1175C10
4	12.56637	2010.62	160	39	39	35	3	62.83	125.66	16	12	10	15	9	37.5	1935.62	7.7	0.011	0.045	046M1200C10
5	15.70796	502.66	32	49	39	34	3	62.83	125.66	4	12	14	20	13	30.1	442.46	11.7	0.009	0.034	056M1050C10
5	15.70796	1005.31	64	49	39	34	3	62.83	125.66	8	12	14	20	13	30.1	945.11	11.7	0.01	0.04	056M1100C10
6	18.84956	508.94	27	59	49	43	3	63.62	127.23	4	16	18	26	17	31.4	446.14	15.7	0.009	0.034	066M1050C10
6	18.84956	1017.88	54	59	49	43	3	63.62	127.23	8	16	18	26	17	31.4	955.08	15.7	0.01	0.04	066M1100C10
8	25.13274	1005.31	40	79	79	71	3	62.83	125.66	8	25	22	33	21	26.6	952.11	19.7	0.011	0.043	086M1100C10

(1) Teeth Pitch Pt = Module x π (2) fp = Single Pitch Error (3) Fp = Total Pitch Error

∗ For all models APEX also provides Rack without screw-holes. By ordering please change the 2nd last order-code position from "1" to "0". Please also refer to page 14.

Rack with Straight Teeth

Quality 8H / Q&T Alloy Steel
Tooth Thickness Tolerance : -48 ~ 0 μm ∗∗
Straight Teeth
Material Quenched and Tempered
Teeth Milled / All Sides Milled

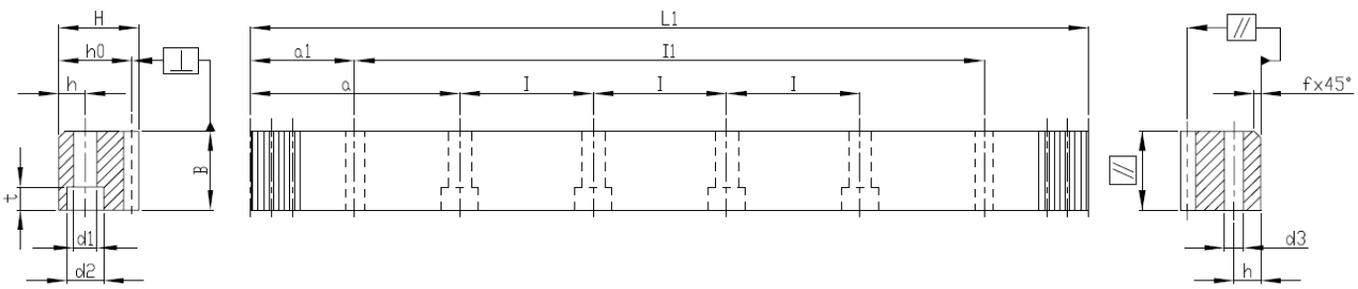

Mn	Pt(1)	L1	Teeth No.	B	H	ho	f	a	l	Hole No.	h	d1	d2	t	a1	l1	d3	f_p(2)	F_p(3)	Order Code *
2	6.28319	502.66	80	25	24	22	2	62.83	125.66	4	8	7	11	7	31.3	440.06	5.7	0.015	0.057	028H1050Q10
2	6.28319	1005.31	160	25	24	22	2	62.83	125.66	8	8	7	11	7	31.3	942.71	5.7	0.016	0.066	028H1100Q10
2	6.28319	1256.64	200	25	24	22	2	62.83	125.66	10	8	7	11	7	31.3	1194.04	5.7	0.016	0.066	028H1125Q10
2	6.28319	1507.96	240	25	24	22	2	62.83	125.66	12	8	7	11	7	31.3	1445.36	5.7	0.016	0.066	028H1150Q10
2	6.28319	1759.29	280	25	24	22	2	62.83	125.66	14	8	7	11	7	31.3	1696.69	5.7	0.016	0.066	028H1175Q10
2	6.28319	2010.62	320	25	24	22	2	62.83	125.66	16	8	7	11	7	31.3	1948.02	5.7	0.018	0.074	028H1200Q10
3	9.42478	508.94	54	30	29	26	2	63.62	127.23	4	9	10	15	9	34.4	440.14	7.7	0.016	0.063	038H1050Q10
3	9.42478	1017.88	108	30	29	26	2	63.62	127.23	8	9	10	15	9	34.4	949.08	7.7	0.018	0.072	038H1100Q10
3	9.42478	1272.35	135	30	29	26	2	63.62	127.23	10	9	10	15	9	34.4	1203.55	7.7	0.018	0.072	038H1125Q10
3	9.42478	1526.81	162	30	29	26	2	63.62	127.23	12	9	10	15	9	34.4	1458.01	7.7	0.018	0.072	038H1150Q10
3	9.42478	1781.28	189	30	29	26	2	63.62	127.23	14	9	10	15	9	34.4	1712.48	7.7	0.018	0.072	038H1175Q10
3	9.42478	2035.75	216	30	29	26	2	63.62	127.23	16	9	10	15	9	34.4	1966.95	7.7	0.019	0.081	038H1200Q10
4	12.56637	502.66	40	40	39	35	3	62.83	125.66	4	12	10	15	9	37.5	427.66	7.7	0.018	0.068	048H1050Q10
4	12.56637	1005.31	80	40	39	35	3	62.83	125.66	8	12	10	15	9	37.5	930.31	7.7	0.019	0.078	048H1100Q10
4	12.56637	1256.64	100	40	39	35	3	62.83	125.66	10	12	10	15	9	37.5	1181.64	7.7	0.019	0.078	048H1125Q10
4	12.56637	1507.96	120	40	39	35	3	62.83	125.66	12	12	10	15	9	37.5	1432.96	7.7	0.019	0.078	048H1150Q10
4	12.56637	1759.29	140	40	39	35	3	62.83	125.66	14	12	10	15	9	37.5	1684.29	7.7	0.019	0.078	048H1175Q10
4	12.56637	2010.62	160	40	39	35	3	62.83	125.66	16	12	10	15	9	37.5	1935.62	7.7	0.021	0.088	048H1200Q10

(1) Teeth Pitch Pt = Module x π (2) fp ＝Single Pitch Error (3) Fp＝Total Pitch Error

∗ For all models APEX also provides Rack without screw-holes. By ordering please change the 2nd last order-code position from "1" to "0". Please also refer to page 14.

∗∗ Basing on the nominal length 1000 mm.

Especially for the application without back-support.

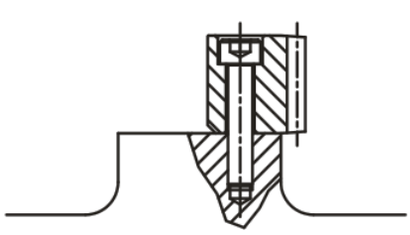

Without alignment / back-support

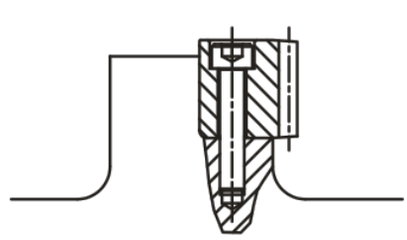

With alignment / back-support

Quality 8 / Carbon Steel

Tooth Thickness Tolerance : -48 ~ 0 μm ∗∗

Straight Teeth

Normalized, Teeth Milled

All Sides Milled

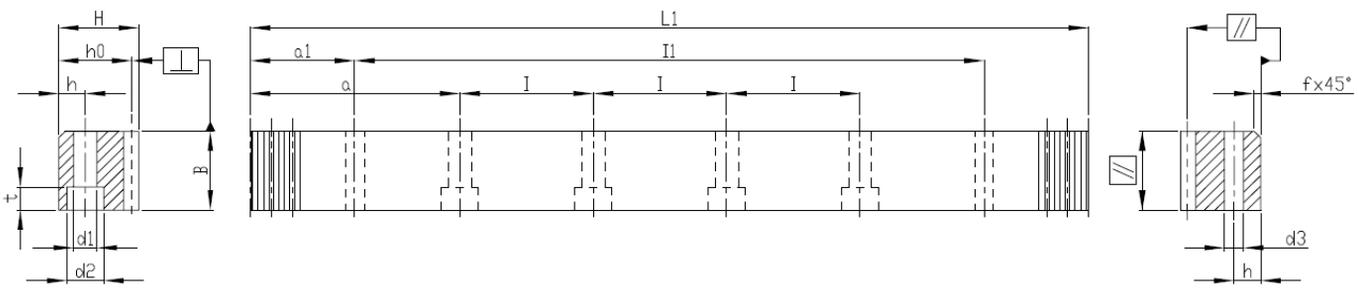

Mn	Pt(1)	L1	Teeth No.	B	H	ho	f	a	l	Hole No.	h	d1	d2	t	a1	l1	d3	f_p(2)	F_p(3)	Order Code *
1	3.14159	999.03	318	15	15	14	2	62.44	124.88	8	6	5	8	5	31.3	936.43	5.7	0.016	0.065	01081100C10
1	3.14159	1998.05	636	15	15	14	2	62.44	124.88	16	6	5	8	5	31.3	1935.45	5.7	0.018	0.074	01081200C10
1.5	4.71239	999.03	212	17	17	15.5	2	62.44	124.88	8	6	6	10	6	31.3	936.43	5.7	0.016	0.066	1J081100C10
1.5	4.71239	1248.78	265	17	17	15.5	2	62.44	124.88	10	6	6	10	6	31.3	1186.18	5.7	0.016	0.066	1J081125C10
1.5	4.71239	1498.54	318	17	17	15.5	2	62.44	124.88	12	6	6	10	6	31.3	1435.94	5.7	0.016	0.066	1J081150C10
1.5	4.71239	1748.3	371	17	17	15.5	2	62.44	124.88	14	6	6	10	6	31.3	1685.7	5.7	0.016	0.066	1J081175C10
1.5	4.71239	1998.05	424	17	17	15.5	2	62.44	124.88	16	6	6	10	6	31.3	1935.45	5.7	0.018	0.074	1J081200C10
2	6.28319	1005.31	160	26	24	22	2	62.83	125.66	8	8	7	11	7	31.3	942.71	5.7	0.016	0.066	02081100C10
2	6.28319	1256.64	200	26	24	22	2	62.83	125.66	10	8	7	11	7	31.3	1194.04	5.7	0.016	0.066	02081125C10
2	6.28319	1507.96	240	26	24	22	2	62.83	125.66	12	8	7	11	7	31.3	1445.36	5.7	0.016	0.066	02081150C10
2	6.28319	1759.29	280	26	24	22	2	62.83	125.66	14	8	7	11	7	31.3	1696.69	5.7	0.016	0.066	02081175C10
2	6.28319	2010.62	320	26	24	22	2	62.83	125.66	16	8	7	11	7	31.3	1948.02	5.7	0.018	0.074	02081200C10
3	9.42478	1017.88	108	31	29	26	2	63.62	127.23	8	9	10	15	9	34.4	949.08	7.7	0.018	0.072	03081100C10
3	9.42478	1272.35	135	31	29	26	2	63.62	127.23	10	9	10	15	9	34.4	1203.55	7.7	0.018	0.072	03081125C10
3	9.42478	1526.81	162	31	29	26	2	63.62	127.23	12	9	10	15	9	34.4	1458.01	7.7	0.018	0.072	03081150C10
3	9.42478	1781.28	189	31	29	26	2	63.62	127.23	14	9	10	15	9	34.4	1712.48	7.7	0.018	0.072	03081175C10
3	9.42478	2035.75	216	31	29	26	2	63.62	127.23	16	9	10	15	9	34.4	1966.95	7.7	0.019	0.081	03081200C10
4	12.56637	1005.31	80	41	39	35	3	62.83	125.66	8	12	10	15	9	37.5	930.31	7.7	0.019	0.078	04081100C10
4	12.56637	1005.31	80	41	39	35	3	62.83	125.66	8	12	14	20	13	37.5	930.31	11.7	0.019	0.078	04081100CS0
4	12.56637	1256.64	100	41	39	35	3	62.83	125.66	10	12	10	15	9	37.5	1181.64	7.7	0.019	0.078	04081125C10
4	12.56637	1507.96	120	41	39	35	3	62.83	125.66	12	12	10	15	9	37.5	1432.96	7.7	0.019	0.078	04081150C10
4	12.56637	1759.29	140	41	39	35	3	62.83	125.66	14	12	10	15	9	37.5	1684.29	7.7	0.019	0.078	04081175C10
4	12.56637	2010.62	160	41	39	35	3	62.83	125.66	16	12	10	15	9	37.5	1935.62	7.7	0.021	0.088	04081200C10
4	12.56637	2010.62	160	41	39	35	3	62.83	125.66	16	12	14	20	13	37.5	1935.62	11.7	0.021	0.088	04081200CS0

(1) Teeth Pitch Pt = Module x π (2) fp ＝Single Pitch Error (3) Fp＝Total Pitch Error

∗ For all models APEX also provides Rack without screw-holes. By ordering please change the 2nd last order-code position from "1" to "0". Please also refer to page 14.

∗∗ Basing on the nominal length 1000 mm.

Rack with Straight Teeth

Quality 8 / Carbon Steel
Tooth Thickness Tolerance : -48 ~ 0 μm ∗∗
Straight Teeth
Normalized, Teeth Milled
All Sides Milled

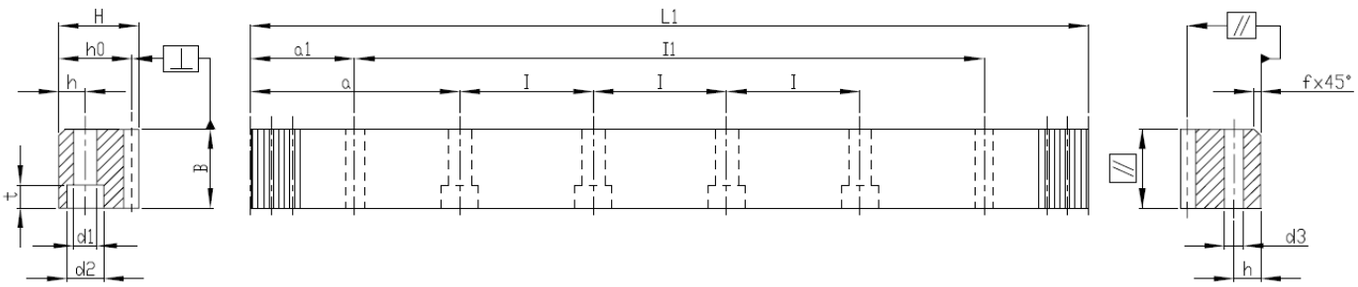

Mn	Pt(1)	L1	Teeth No.	B	H	ho	f	a	l	Hole No.	h	d1	d2	t	a1	l1	d3	f_p(2)	F_p(3)	Order Code *
5	15.70796	1005.31	64	50	39	34	3	62.83	125.66	8	12	14	20	13	30.1	945.11	11.7	0.019	0.078	05081100C10
5	15.70796	1256.64	80	50	39	34	3	62.83	125.66	10	12	14	20	13	30.1	1196.44	11.7	0.019	0.078	05081125C10
5	15.70796	1507.96	96	50	39	34	3	62.83	125.66	12	12	14	20	13	30.1	1447.76	11.7	0.019	0.078	05081150C10
5	15.70796	1759.29	112	50	39	34	3	62.83	125.66	14	12	14	20	13	30.1	1699.09	11.7	0.019	0.078	05081175C10
5	15.70796	2010.62	128	50	39	34	3	62.83	125.66	16	12	14	20	13	30.1	1950.42	11.7	0.021	0.088	05081200C10
6	18.84956	1017.88	54	60	49	43	3	63.62	127.23	8	16	18	26	17	31.4	955.08	15.7	0.019	0.078	06081100C10
6	18.84956	1281.77	68	60	49	43	3	63.62	127.23	10	16	18	26	17	31.4	1218.97	15.7	0.019	0.078	06081125C10
6	18.84956	1526.81	81	60	49	43	3	63.62	127.23	12	16	18	26	17	31.4	1464.01	15.7	0.019	0.078	06081150C10
6	18.84956	1790.71	95	60	49	43	3	63.62	127.23	14	16	18	26	17	31.4	1727.91	15.7	0.019	0.078	06081175C10
6	18.84956	2035.75	108	60	49	43	3	63.62	127.23	16	16	18	26	17	31.4	1972.95	15.7	0.021	0.088	06081200C10
8	25.13274	1005.31	40	81	79	71	3	62.83	125.66	8	25	22	33	21	26.6	952.11	19.7	0.022	0.084	08081100C10
8	25.13274	1256.64	50	81	79	71	3	62.83	125.66	10	25	22	33	21	26.6	1203.44	19.7	0.022	0.084	08081125C10
8	25.13274	1507.96	60	81	79	71	3	62.83	125.66	12	25	22	33	21	26.6	1454.76	19.7	0.022	0.084	08081150C10
8	25.13274	1759.29	70	81	79	71	3	62.83	125.66	14	25	22	33	21	26.6	1706.09	19.7	0.022	0.084	08081175C10
8	25.13274	2010.62	80	81	79	71	3	62.83	125.66	16	25	22	33	21	26.6	1957.42	19.7	0.024	0.095	08081200C10
10	31.41593	1005.31	32	100	99	89	3	62.83	125.66	8	32	33	48	32	125.66	753.99	19.7	0.022	0.084	10081100C10
12	37.69911	1017.88	27	120	120	108	3	63.62	127.23	8	40	39	58	38	127.23	763.42	19.7	0.026	0.09	12081100C10

(1) Teeth Pitch Pt = Module x π (2) fp ＝Single Pitch Error (3) Fp＝Total Pitch Error

∗ For all models APEX also provides Rack without screw-holes. By ordering please change the 2nd last order-code position from "1" to "0". Please also refer to page 14.

∗∗ Basing on the nominal length 1000 mm.

Quality 9 / Stainless Steel

Tooth Thickness Tolerance : -63 ~ 0 μm ∗∗
Straight Teeth
Solution, Teeth Milled
All Sides Milled

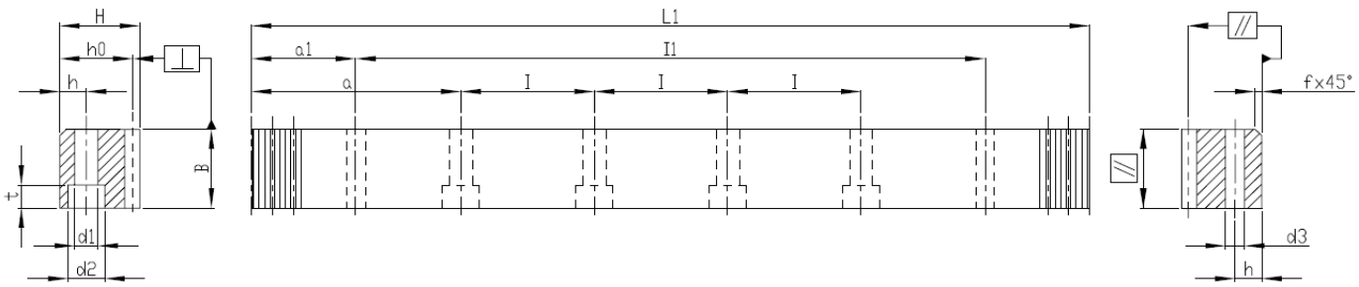

Mn	Pt(1)	L1	Teeth No.	B	H	ho	f	a	l	Hole No.	h	d1	d2	t	a1	l1	d3	f_p(2)	F_p(3)	Order Code ∗
1	3.14159	502.66	160	15	15	14.00	2	62.85	125.66	4	6.0	5	8	5	31.3	440.06	5.7	0.021	0.080	01091050S10
1	3.14159	1005.31	320	15	15	14.00	2	62.85	125.66	8	6.0	5	8	5	31.3	942.71	5.7	0.023	0.092	01091100S10
2	6.28319	502.66	80	26	24	22.00	2	62.83	125.66	4	8.0	7	11	7	31.3	440.06	5.7	0.021	0.080	02091050S10
2	6.28319	1005.31	160	26	24	22.00	2	62.83	125.66	8	8.0	7	11	7	31.3	942.71	5.7	0.023	0.092	02091100S10
3	9.42478	508.94	54	31	29	26.00	2	63.62	127.23	4	9.0	10	15	9	34.4	440.14	7.7	0.023	0.088	03091050S10
3	9.42478	1017.88	108	31	29	26.00	2	63.62	127.23	8	9.0	10	15	9	34.4	949.08	7.7	0.025	0.101	03091100S10
4	12.56637	502.66	40	41	39	35.00	3	62.83	125.66	4	12.0	10	15	9	37.5	427.66	7.7	0.025	0.095	04091050S10
4	12.56637	1005.31	80	41	39	35.00	3	62.83	125.66	8	12.0	10	15	9	37.5	930.31	7.7	0.027	0.109	04091100S10
4	12.56637	1507.96	120	41	39	35.00	3	62.83	125.66	12	12.0	10	15	9	37.5	1432.96	7.7	0.027	0.109	04091150S10
4	12.56637	2010.62	160	41	39	35.00	3	62.83	125.66	16	12.0	10	15	9	37.5	1935.62	7.7	0.029	0.123	04091200S10
5	15.70796	502.66	32	50	39	34.00	3	62.83	125.66	4	12.0	14	20	13	30.1	442.46	11.7	0.025	0.095	05091050S10
5	15.70796	1005.31	64	50	39	34.00	3	62.83	125.66	8	12.0	14	20	13	30.1	945.11	11.7	0.027	0.109	05091100S10
5	15.70796	1507.96	96	50	39	34.00	3	62.83	125.66	12	12.0	14	20	13	30.1	1447.76	11.7	0.027	0.109	05091150S10
5	15.70796	2010.62	128	50	39	34.00	3	62.83	125.66	16	12.0	14	20	13	30.1	1950.42	11.7	0.029	0.123	05091200S10
6	18.84956	508.94	27	60	49	43.00	3	63.62	127.23	4	16.0	18	26	17	31.4	446.14	15.7	0.025	0.095	06091050S10
6	18.84956	1017.88	54	60	49	43.00	3	63.62	127.23	8	16.0	18	26	17	31.4	955.08	15.7	0.027	0.109	06091100S10
6	18.84956	2035.75	108	60	49	43.00	3	63.62	127.23	16	16.0	18	26	17	31.4	1972.95	15.7	0.029	0.123	06091200S10

(1) Teeth Pitch Pt = Module x π (2) fp = Single Pitch Error (3) Fp = Total Pitch Error

∗ For all models APEX also provides Rack without screw-holes. By ordering please change the 2nd last order-code position from "1" to "0". Please also refer to page 14.

∗∗ Basing on the nominal length 1000 mm.

Rack with Straight Teeth

Quality 10 / Carbon Steel
Tooth Thickness Tolerance : -90 ~ 0 μm ∗∗
Straight Teeth
Teeth Induction Hardened
All Sides Milled

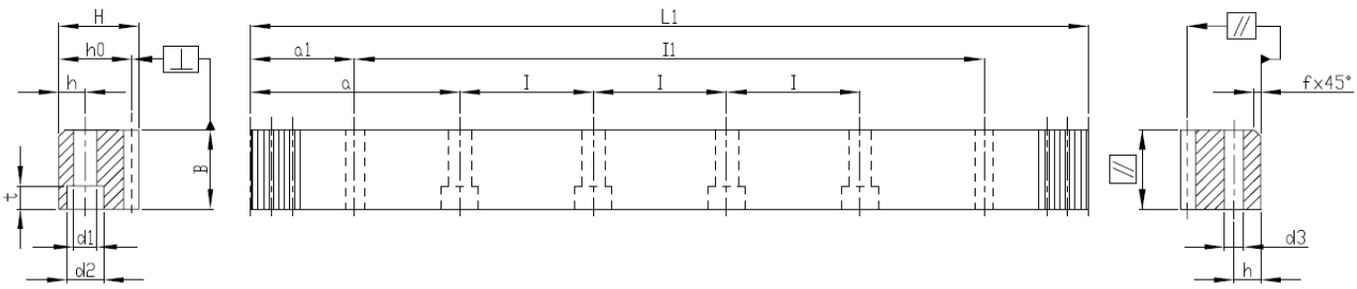

Mn	Pt(1)	L1	Teeth No.	B	H	ho	f	a	l	Hole No.	h	d1	d2	t	a1	l1	d3	f_p(2)	F_p(3)	Order Code *
1	3.14159	999.03	318	15	15	14	2	62.44	124.88	8	6	5	8	5	31.3	936.43	5.7	0.037	0.146	01101100C10
1	3.14159	1998.05	636	15	15	14	2	62.44	124.88	16	6	5	8	5	31.3	1935.45	5.7	0.037	0.146	01101200C10
1.5	4.71239	999.03	212	17	17	15.5	2	62.44	124.88	8	6	6	10	6	31.3	936.43	5.7	0.037	0.148	1J101100C10
1.5	4.71239	1248.78	265	17	17	15.5	2	62.44	124.88	10	6	6	10	6	31.3	1186.18	5.7	0.037	0.148	1J101125C10
1.5	4.71239	1498.54	318	17	17	15.5	2	62.44	124.88	12	6	6	10	6	31.3	1435.94	5.7	0.037	0.148	1J101150C10
1.5	4.71239	1748.3	371	17	17	15.5	2	62.44	124.88	14	6	6	10	6	31.3	1685.7	5.7	0.037	0.148	1J101175C10
1.5	4.71239	1998.05	424	17	17	15.5	2	62.44	124.88	16	6	6	10	6	31.3	1935.45	5.7	0.041	0.165	1J101200C10
2	6.28319	1005.31	160	26	24	22	2	62.83	125.66	8	8	7	11	7	31.3	942.71	5.7	0.037	0.148	02101100C10
2	6.28319	1256.64	200	26	24	22	2	62.83	125.66	10	8	7	11	7	31.3	1194.04	5.7	0.037	0.148	02101125C10
2	6.28319	1507.96	240	26	24	22	2	62.83	125.66	12	8	7	11	7	31.3	1445.36	5.7	0.037	0.148	02101150C10
2	6.28319	1759.29	280	26	24	22	2	62.83	125.66	14	8	7	11	7	31.3	1696.69	5.7	0.037	0.148	02101175C10
2	6.28319	2010.62	320	26	24	22	2	62.83	125.66	16	8	7	11	7	31.3	1948.02	5.7	0.041	0.167	02101200C10
3	9.42478	1017.88	108	31	29	26	2	63.62	127.23	8	9	10	15	9	34.4	949.08	7.7	0.039	0.162	03101100C10
3	9.42478	1272.35	135	31	29	26	2	63.62	127.23	10	9	10	15	9	34.4	1203.55	7.7	0.039	0.162	03101125C10
3	9.42478	1526.81	162	31	29	26	2	63.62	127.23	12	9	10	15	9	34.4	1458.01	7.7	0.039	0.162	03101150C10
3	9.42478	1781.28	189	31	29	26	2	63.62	127.23	14	9	10	15	9	34.4	1712.48	7.7	0.039	0.162	03101175C10
3	9.42478	2035.75	216	31	29	26	2	63.62	127.23	16	9	10	15	9	34.4	1966.95	7.7	0.043	0.182	03101200C10
4	12.56637	1005.31	80	41	39	35	3	62.83	125.66	8	12	10	15	9	37.5	930.31	7.7	0.043	0.175	04101100C10
4	12.56637	1005.31	80	41	39	35	3	62.83	125.66	8	12	14	20	13	37.5	930.31	11.7	0.043	0.175	04101100CS0
4	12.56637	1256.64	100	41	39	35	3	62.83	125.66	10	12	10	15	9	37.5	1181.64	7.7	0.043	0.175	04101125C10
4	12.56637	1507.96	120	41	39	35	3	62.83	125.66	12	12	10	15	9	37.5	1432.96	7.7	0.043	0.175	04101150C10
4	12.56637	1759.29	140	41	39	35	3	62.83	125.66	14	12	10	15	9	37.5	1684.29	7.7	0.043	0.175	04101175C10
4	12.56637	2010.62	160	41	39	35	3	62.83	125.66	16	12	10	15	9	37.5	1935.62	7.7	0.047	0.197	04101200C10
4	12.56637	2010.62	160	41	39	35	3	62.83	125.66	16	12	14	20	13	37.5	1935.62	11.7	0.047	0.197	04101200CS0
5	15.70796	1005.31	64	50	39	34	3	62.83	125.66	8	12	14	20	13	30.1	945.11	11.7	0.043	0.175	05101100C10
5	15.70796	1256.64	80	50	39	34	3	62.83	125.66	10	12	14	20	13	30.1	1196.44	11.7	0.043	0.175	05101125C10
5	15.70796	1507.96	96	50	39	34	3	62.83	125.66	12	12	14	20	13	30.1	1447.76	11.7	0.043	0.175	05101150C10
5	15.70796	1759.29	112	50	39	34	3	62.83	125.66	14	12	14	20	13	30.1	1699.09	11.7	0.043	0.175	05101175C10
5	15.70796	2010.62	128	50	39	34	3	62.83	125.66	16	12	14	20	13	30.1	1950.42	11.7	0.047	0.197	05101200C10
6	18.84956	1017.88	54	60	49	43	3	63.62	127.23	8	16	18	26	17	31.4	955.08	15.7	0.043	0.175	06101100C10
6	18.84956	1281.77	68	60	49	43	3	63.62	127.23	10	16	18	26	17	31.4	1218.97	15.7	0.043	0.175	06101125C10
6	18.84956	1526.81	81	60	49	43	3	63.62	127.23	12	16	18	26	17	31.4	1464.01	15.7	0.043	0.175	06101150C10
6	18.84956	1790.71	95	60	49	43	3	63.62	127.23	14	16	18	26	17	31.4	1727.91	15.7	0.043	0.175	06101175C10
6	18.84956	2035.75	108	60	49	43	3	63.62	127.23	16	16	18	26	17	31.4	1972.95	15.7	0.047	0.197	06101200C10
8	25.13274	1005.31	40	81	79	71	3	62.83	125.66	8	25	22	33	21	26.6	952.11	19.7	0.049	0.188	08101100C10
8	25.13274	1256.64	50	81	79	71	3	62.83	125.66	10	25	22	33	21	26.6	1203.44	19.7	0.049	0.188	08101125C10
8	25.13274	1507.96	60	81	79	71	3	62.83	125.66	12	25	22	33	21	26.6	1454.76	19.7	0.049	0.188	08101150C10
8	25.13274	1759.29	70	81	79	71	3	62.83	125.66	14	25	22	33	21	26.6	1706.09	19.7	0.049	0.188	08101175C10
8	25.13274	2010.62	80	81	79	71	3	62.83	125.66	16	25	22	33	21	26.6	1957.42	19.7	0.053	0.212	08101200C10
10	31.41593	1005.31	32	100	99	89	3	62.83	125.66	8	32	33	48	32	125.66	753.99	19.7	0.049	0.188	10101100C10
12	37.69911	1017.88	27	120	120	108	3	63.62	127.23	8	40	39	58	38	127.23	763.42	19.7	0.059	0.202	12101100C10

(1) Teeth Pitch Pt = Module x π (2) fp = Single Pitch Error (3) Fp = Total Pitch Error

∗ For all models APEX also provides Rack without screw-holes. By ordering please change the 2nd last order-code position from "1" to "0". Please also refer to page 14.

∗∗ Basing on the nominal length 1000 mm.

Rack with Straight Teeth

(with Linear-Guide Interface, 90° Type)

Quality 6 / Carbon Steel

Tooth Thickness Tolerance : -22 ~ 0 μm
Straight Teeth
Teeth Induction Hardened and Ground
All Sides Ground

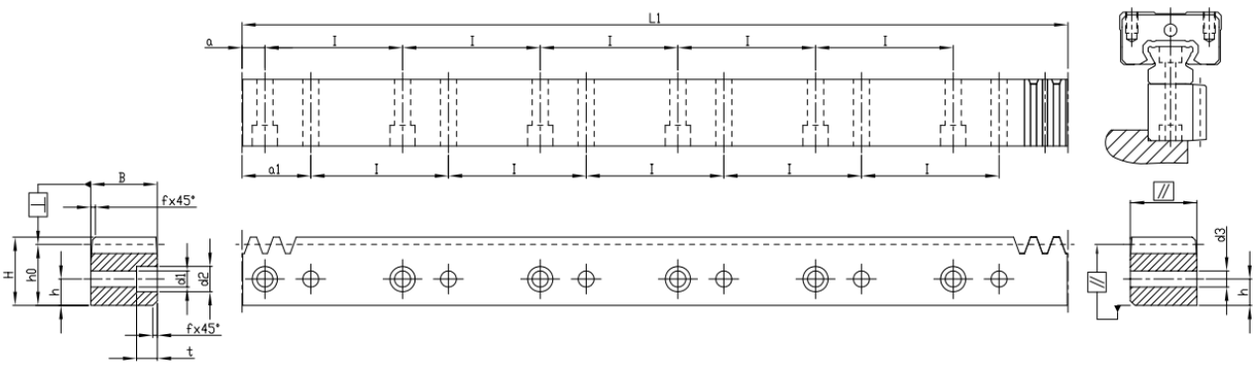

Mn	Pt(1)	L1	Teeth No.	B	H	ho	f	a	l	Hole No.	h	d1	d2	t	a1	d3	f_p(2)	F_p(3)	Order Code
1.591	5	960	192	19	19.50	17.91	1	10	60	16	7.5	4.5	7.5	5.3	30	4.5	0.008	0.034	1K061100C10A1
1.591	5	960	192	24	24.50	22.91	1	10	60	16	10.0	6	9.5	8.5	30	6	0.008	0.034	1K061100CS0A1
3.183	10	960	96	29	29.75	26.57	2	10	60	16	11.5	7	11.0	9.0	30	7	0.009	0.037	3B061100C10A1
4.244	13.33	960	72	39	39.75	35.51	2	20	80	12	14.0	10	15.0	9.0	40	10	0.010	0.040	4D061100C10A1

Quality 8 / Carbon Steel

Tooth Thickness Tolerance : -48 ~ 0μm ＊＊
Straight Teeth
Teeth Milled, All Side Milled

Mn	Pt(1)	L1	Teeth No.	B	H	ho	f	a	l	Hole No.	h	d1	d2	t	a1	d3	f_p(2)	F_p(3)	Order Code
1.591	5	1920	384	20	19.50	17.91	1	10	60	32	7.5	4.5	7.5	5.3	30	4.5	0.018	0.074	1K081200C10A1
1.591	5	1920	384	25	24.50	22.91	1	10	60	32	10.0	6.0	9.5	8.5	30	6.0	0.018	0.074	1K081200CS0A1
3.183	10	1920	192	30	29.75	26.57	2	10	60	32	11.5	7.0	11.0	9.0	30	7.0	0.019	0.081	3B081200C10A1
4.244	13.33	1920	144	40	39.75	35.51	2	20	80	24	14.0	10.0	15.0	9.0	40	10.0	0.021	0.088	4D081200C10A1

(1) Teeth Pitch Pt = Module x π (2) fp ＝Single Pitch Error (3) Fp＝Total Pitch Error
＊＊ Basing on the nominal length 1000 mm.

Rack with Straight Teeth

(with Linear-Guide Interface, 180° Type)

Quality 6 / Carbon Steel

Tooth Thickness Tolerance : -22 ~ 0 μm
Straight Teeth
Teeth Induction Hardened and Ground
All Sides Ground

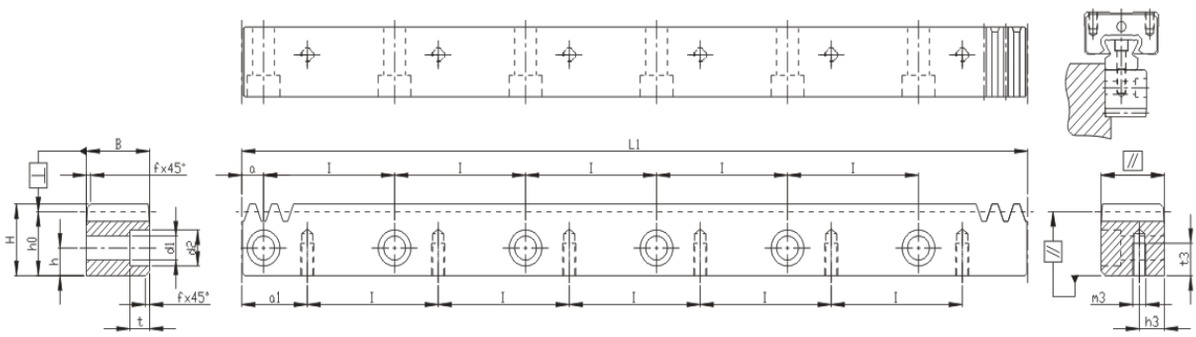

Mn	Pt(1)	L1	Teeth No.	B	H	ho	f	a	l	Hole No.	h	d1	d2	t	a1	m3	h3	t3	f_p(2)	F_p(3)	Order Code
1.591	5.00	960	192	19	19.50	17.91	1	10	60	16	7.5	6	9.5	6	30	M4	7.5	8.0	0.008	0.034	1K061100C10A2
1.591	5.00	960	192	24	24.50	22.91	1	10	60	16	10.0	7	11	7	30	M5	10.0	11.0	0.008	0.034	1K061100CS0A2
3.183	10.00	960	96	29	29.75	26.57	2	10	60	16	11.5	10	15	9	30	M6	11.5	13.5	0.009	0.037	3B061100C10A2
4.244	13.33	960	72	39	39.75	35.51	2	20	80	12	14.0	12	18	12	40	M8	14.0	16.0	0.010	0.040	4D061100C10A2

Quality 8 / Carbon Steel

Tooth Thickness Tolerance : -48 ~ 0μm ＊＊
Straight Teeth
Teeth Milled, All Side Milled

Mn	Pt(1)	L1	Teeth No.	B	H	ho	f	a	l	Hole No.	h	d1	d2	t	a1	m3	h3	t3	f_p(2)	F_p(3)	Order Code
1.591	5.00	1920	384	20	19.5	17.91	1	10	60	32	7.5	6	9.5	6	30	M4	7.5	8.0	0.018	0.074	1K081200C10A2
1.591	5.00	1920	384	25	24.5	22.91	1	10	60	32	10.0	7	11.0	7	30	M5	10.0	11.0	0.018	0.074	1K081200CS0A2
3.183	10.00	1920	192	30	29.75	26.57	2	10	60	32	11.5	10	15.0	9	30	M6	11.5	13.5	0.019	0.081	3B081200C10A2
4.244	13.33	1920	144	40	39.75	35.51	2	20	80	24	14.0	12	18.0	12	40	M8	14.0	16.0	0.021	0.088	4D081200C10A2

(1) Teeth Pitch Pt = Module x π (2) fp ＝Single Pitch Error (3) Fp＝Total Pitch Error
＊＊ Basing on the nominal length 1000 mm.

Pinion with Straight Teeth

(Interface : Curvic Plate / EN ISO 9409-1-A)

Quality DIN 4 / Alloy Steel
Tooth Thickness Tolerance : e24
Straight Teeth
Case-Hardened and Teeth Ground

Bolt Circle Ø50

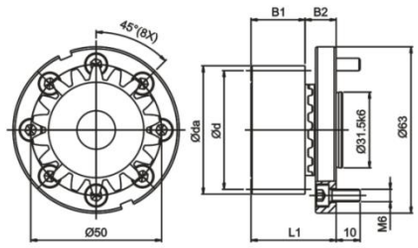

Fig. B

Mn	z(1)	x(2)	da(3)	d(4)	dw(5)	B1	B2	L1	L(6)	Locking screw for pinion	Fig	Order Code	
												Set	Pinion only
2	21	0.5	48	42	44	26	15	41	131.947	M10	B	A02121B050	A02121

Bolt Circle Ø63

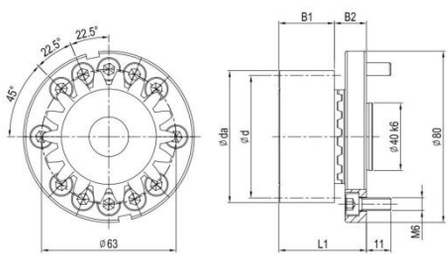

Fig. A

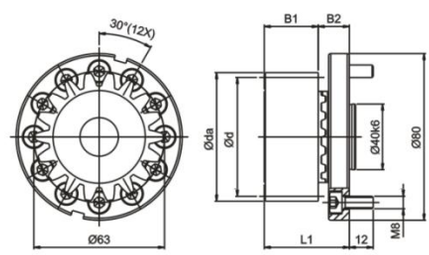

Fig. C

Mn	z(1)	x(2)	da(3)	d(4)	dw(5)	B1	B2	L1	L(6)	Locking screw for pinion	Fig	Order Code	
												Set	Pinion only
2	21	0.5	48	42	44	26	15	41	131.947	M10	A	A02121A063	A02121
							19.5	45.5			C	A02121C063	

Bolt Circle Ø80

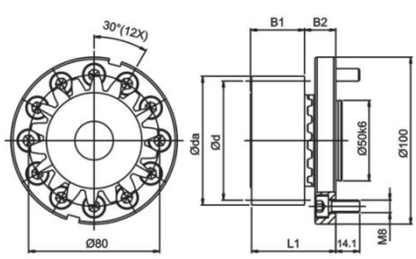

Fig. A

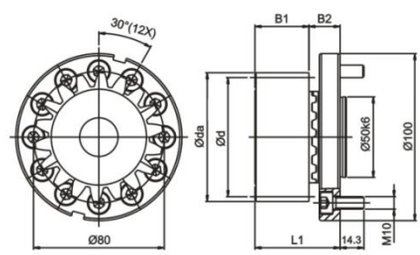

Fig. C

Mn	z(1)	x(2)	da(3)	d(4)	dw(5)	B1	B2	L1	L(6)	Locking screw for pinion	Fig	Order Code	
												Set	Pinion only
3	19	0.1667	64	57	58	31	21.5	52.5	179.071	M12	A	A03119A080	A03119
											C	A03119C080	

(1) Number of teeth (2) Profile modification factor (3) Diameter of addendum circle (4) Pitch circle diameter
(5) Working pitch circle diameter (6) Pitch circle length L = π x d

Pinion with Straight Teeth

(Interface : Curvic Plate / EN ISO 9409-1-A)

Quality DIN 4 / Alloy Steel
Tooth Thickness Tolerance : e24
Straight Teeth
Case-Hardened and Teeth Ground

Bolt Circle Ø125

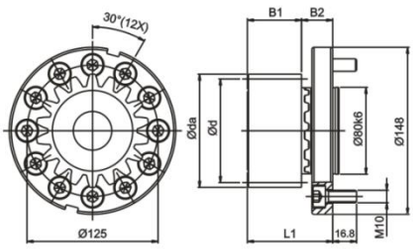

Fig. A

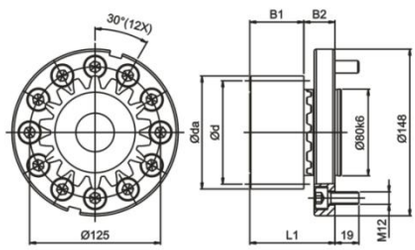

Fig. C

Mn	z(1)	x(2)	da(3)	d(4)	dw(5)	B1	B2	L1	L(6)	Locking screw for pinion	Fig	Order Code	
												Set	Pinion only
4	19	0.6875	89.5	76	81.5	41	29	70	238.761	M16	A	A04119A125	A04119
											C	A04119C125	

Bolt Circle Ø140 / Ø145

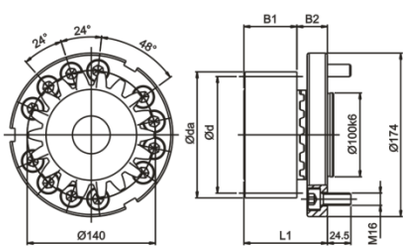

Fig. A

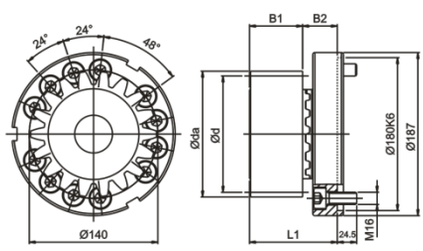

Fig. B

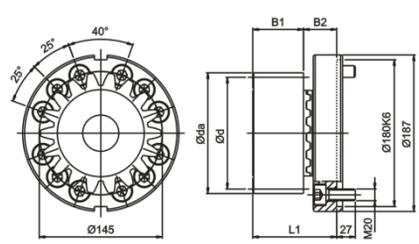

Fig. C

Mn	z(1)	x(2)	da(3)	d(4)	dw(5)	B1	B2	L1	L(6)	Locking screw for pinion	Fig	Order Code	
												Set	Pinion only
5	19	0.3	108	95	98	51	38	89	298.451	M20	A	A05119A140	A05119
											B	A05119B140	
											C	A05119C145	

Quality DIN 4 / Alloy Steel
Tooth Thickness Tolerance : e24
Straight Teeth
Case-Hardened and Teeth Ground

Bolt Circle Ø160 / Ø166

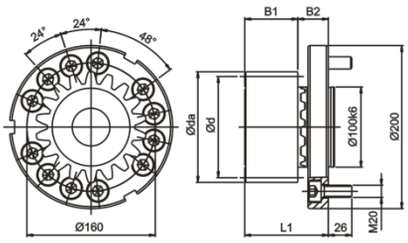

Fig. A

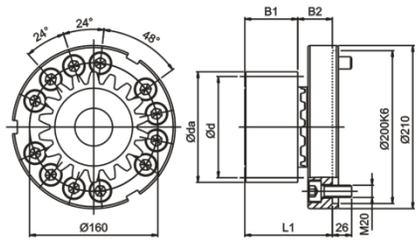

Fig. B

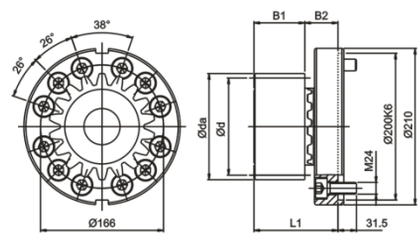

Fig. C

Mn	z(1)	x(2)	da(3)	d(4)	dw(5)	B1	B2	L1	L(6)	Locking screw for pinion	Fig	Order Code	
												Set	Pinion only
6	19	0.25	129	114	117	61	49	110	358.142	M24	A	A06119A160	A06119
											B	A06119B160	
											C	A06119C166	

Bolt Circle Ø200

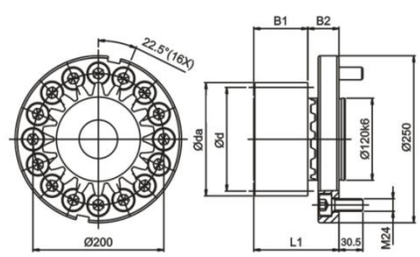

Mn.	z(1)	x(2)	da(3)	d(4)	dw(5)	B1	B2	L1	L(6)	Locking screw for pinion	Order Code	
											Set	Pinion only
8	16	0.3125	149	128	133	81	50	131	402.124	M30	A08116A200	A08116

(1) Number of teeth (2) Profile modification factor (3) Diameter of addendum circle (4) Pitch circle diameter
(5) Working pitch circle diameter (6) Pitch circle length L = π x d

Pinion with Straight Teeth

(Interface : Curvic Plate / EN ISO 9409-1-A)

Quality DIN 4 / Alloy Steel
Tooth Thickness Tolerance : e24
Straight Teeth
Case-Hardened and Teeth Ground

Bolt Circle Ø250

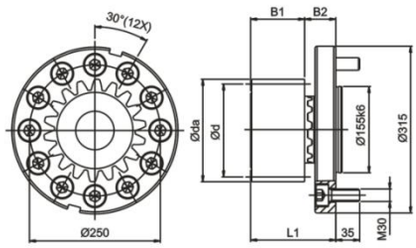

Mn.	z(1)	x(2)	da(3)	d(4)	dw(5)	B1	B2	L1	L(6)	Locking screw for pinion	Order Code	
											Set	Pinion only
10	15	0.45	179	150	159	101	62	163	471.239	M36	A10115A250	A10115

(1) Number of teeth (2) Profile modification factor (3) Diameter of addendum circle (4) Pitch circle diameter
(5) Working pitch circle diameter (6) Pitch circle length L = π * d

PCD of Flange	Bolt / Screw Size	Max. Torque (Nm)
Ø31.5	M5	75
Ø50	M6	175
Ø63	M6	335
	M8	640
Ø80	M8	810
	M10	1320
Ø125	M10	2,055
	M12	3,060
Ø140	M16	6,620
Ø145	M20	10,885
Ø160	M20	12,000
Ø166	M24	18,160
Ø200	M24	29,170
Ø250	M30	44,320

Table of screw tightening torque

Screw	Screw tightening torque (Nm)
M5 x 0.8P	9.8
M6 x 1P	17
M8 x 1.25P	41
M10 x 1.5P	80
M12 x 1.75P	139
M16 x 2P	343
M20 x 2.5P	692
M24 x 3P	1,190
M30 x 3.5P	2,380
M36 x 4P	4,136

Pinion material carburized, the surface hardness reaches to 60 HRC after case hardening. Teeth surface ground in order to reduce noise and improve wear resistance. Accessories include hexagon socket head cap screws（Strength 12.9，DIN 912）

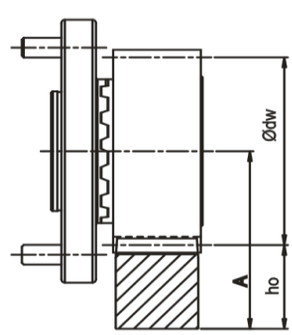

$$A = ho + \frac{\phi\, dw}{2}$$

In Table 9, the maximum permissible torque of the Curvic Plate pinion and the rack is calculated on the basis of a speed of 1.5 m/s and providing good lubrication (using an automatic lubrication system or manually applied grease every day), the tooth root strength factor $S_F \geqq 1.4$, tooth surface strength coefficient $S_H \geqq 1$, the safety factor $S_B \fallingdotseq 1$, and the required service life of 20,000 hours. By higher speed, the max. permissible torque reduced. The user needs to increase the safety factor for the application.
Backlash changes by different center height. Please contact APEX under WWW.APEXDYNA.COM.

Table 9. The max. permitted torque and feed-force of pinion with Curvic Plate

Pinion \ Rack			Quality	Q4	Q5	Q6	Q6M	Q8H	Q8	Q9	Q10
			Material	Carbon Steel	Carbon Steel	Carbon Steel	Carbon Steel	Q&T Alloy Steel	Carbon Steel	Stainless Steel	Carbon Steel
			Heat Treatment	Induction Hardening	Induction Hardening	Induction Hardening	Induction Hardening	Quenched Tempered	Normalizing	Solution	Induction Hardening
Mn	z(1)	dw(5)	Max. Torque * and Feed-Force								
2	21	44	F_{2T}(8) (N)		6,429	6,429	6,429	1,905	1,190	714	4,048
			T_{2B}(9) (Nm)		135	135	135	40	25	15	85
3	19	58	F_{2T}(8) (N)		14,211	13,860	13,860	7,018	3,684	1,754	9,825
			T_{2B}(9) (Nm)		405	395	395	200	105	50	280
	21	66	F_{2T}(8) (N)		12,698	12,381	12,381	4,444	2,540	1,270	9,683
			T_{2B}(9) (Nm)		400	390	390	140	80	40	305
4	19	81.5	F_{2T}(8) (N)		26,974	26,711	26,711	13,289	7,500	3,026	20,921
			T_{2B}(9) (Nm)		1,025	1,015	1,015	505	285	115	795
5	19	98	F_{2T}(8) (N)	44,316	44,316	44,211	44,211		14,316	5,263	36,211
			T_{2B}(9) (Nm)	2,105	2,105	2,100	2,100		680	250	1,720
6	19	117	F_{2T}(8) (N)	63,333	63,246	63,246	63,246		22,982	9,474	54,123
			T_{2B}(9) (Nm)	3,610	3,605	3,605	3,605		1,310	540	3,085
8	16	133	F_{2T}(8) (N)	93,125	93,125	93,125	93,125		34,531		76,563
			T_{2B}(9) (Nm)	5,960	5,960	5,960	5,960		2,210		4,900
10	15	159	F_{2T}(8) (N)	144,000	144,000	144,000	144,000		54,000		131,467
			T_{2B}(9) (Nm)	10,800	10,800	10,800	10,800		4,050		9,860

* The Maximal Driving Torque is also to be understood as the Maximal Acceleration Torque T_{2B}.
The Emergency Stop Torque $T_{2NOT} = 2 \times T_{2B}$, under the condition limited 1000 times in the whole service period.

(1) Number of Teeth (5) Working Pitch Circle Diameter (in mm) (8) Maximum Feed-Force (9) Maximum Driving Torque

Pinion with Straight Teeth

(Interface : Welded Plate(★)/ EN ISO 9409-1-A)

Quality DIN 4 / Alloy Steel
Tooth Thickness Tolerance : e24
Straight Teeth
Case-Hardened and Teeth Ground

Bolt Circle Ø50

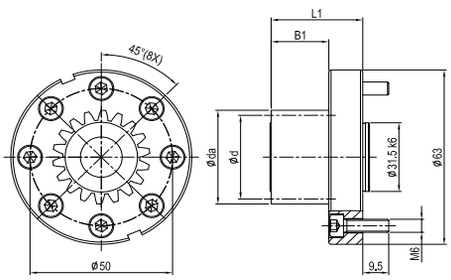

Fig. A

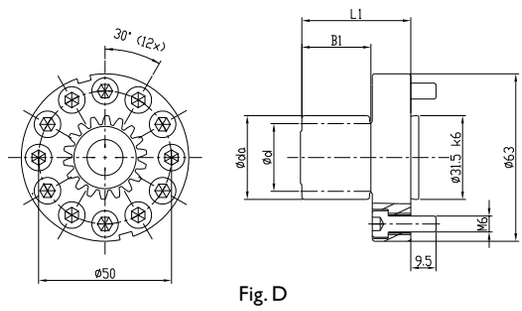

Fig. D

Mn.	z(1)	x(2)	da(3)	d(4)	dw(5)	B1	L1	L(6)	Fig	Order Code
2	13	0.366	31.464	26	27.464	26.0	41.0	81.681	A	B02113A050
									D	B02113D050
	17	-0.012	37.952	34	33.952	26.0	41.0	106.814	A	B02117A050
									D	B02117D050

Bolt Circle Ø63

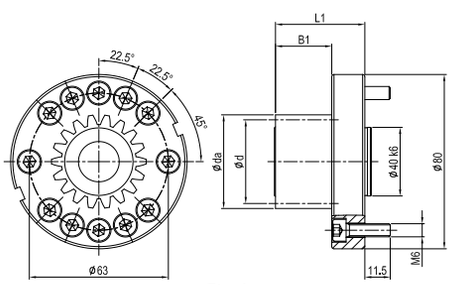

Fig. A

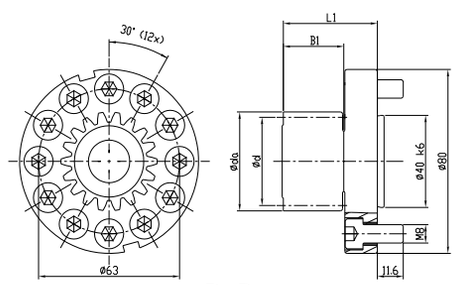

Fig. D

Mn.	z(1)	x(2)	da(3)	d(4)	dw(5)	B1	L1	L(6)	Fig	Order Code
2	13	0.366	31.464	26	27.464	26.0	41.0	81.681	A	B02113A063
									D	B02113D063
	17 .012 -0		37.952	34	33.952	26.0	41.0	106.814	A	B02117A063
									D	B02117D063
	24	0.202	52.808	48	48.808	26.0	41.0	150.796	A	B02124A063
3	13	0.366	47.196	39	41.196	32.5	47.5	122.522	A	B03113A063
									D	B03113D063

(1) Number of teeth (2) Profile modification factor (3) Diameter of addendum circle (4) Pitch circle diameter
(5) Working pitch circle diameter (6) Pitch circle length L = π x d
★ Note: Not for German market !

Pinion with Straight Teeth

(Interface : Welded Plate(★)/ EN ISO 9409-1-A)

Quality DIN 4 / Alloy Steel
Tooth Thickness Tolerance : e24
Straight Teeth
Case-Hardened and Teeth Ground

Bolt Circle Ø80

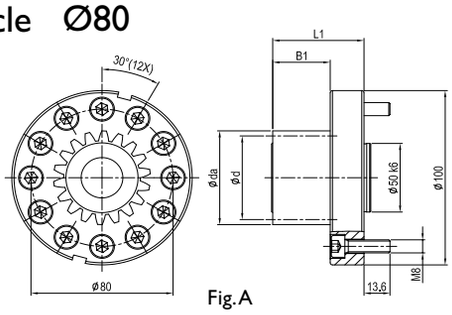

Fig. A

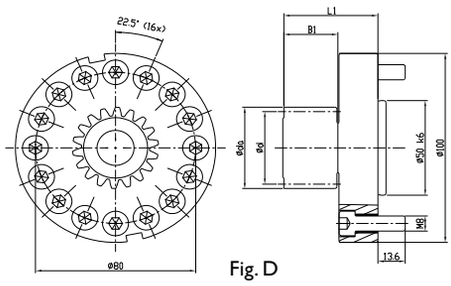

Fig. D

Mn.	z(1)	x(2)	da(3)	d(4)	dw(5)	B1	L1	L(6)	Fig	Order Code
2	13	0.366	31.464	26	27.464	26.0	46.0	81.681	A	B02113A080
									D	B02113D080
	24	.202 0	52.808	48	48.808	26.0	46.0	150.796	A	B02124A080
									D	B02124D080
3	13	0.366	47.196	39	41.196	32.5	52.5	122.522	A	B03113A080
									D	B03113D080
	20	0.08	66.48	60	60.48	32.5	52.5	188.496	A	B03120A080
									D	B03120D080
4	13	0.366	62.928	52	54.928	45.0	65.0	163.363	A	B04113A080
									D	B04113D080

Bolt Circle Ø125

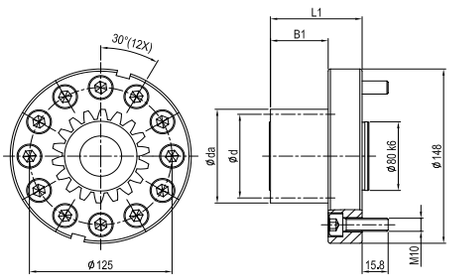

Fig. A

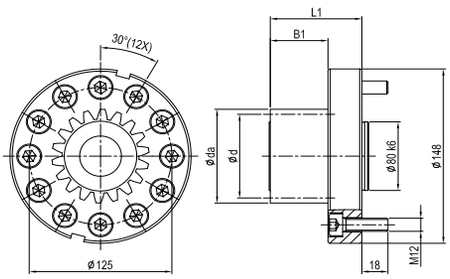

Fig. C

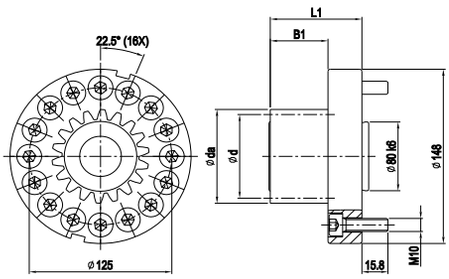

Fig. D

Mn	z(1)	x(2)	da(3)	d(4)	dw(5)	B1	L1	L(6)	Fig	Order Code
3	13	0.366	47.196	39	41.196	32.5	57.5	122.522	A	B03113A125
									C	B03113C125
									D	B03113D125
	20	0.08	66.48	60	60.48	32.5	57.5	188.496	A	B03120A125
									C	B03120C125
									D	B03120D125
	27	0.294	88.764	81	82.764	32.5	57.5	254.469	C	B03127C125
									D	B03127D125
	33	0.477	107.862	99	101.862	32.5	57.5	311.018	D	B03133D125
4	13	0.366	62.928	52	54.928	45	70	163.363	A	B04113A125
									C	B04113C125
									D	B04113D125
	20	0.19	89.52	80	81.52	45	70	251.327	A	B04120A125
									C	B04120C125
									D	B04120D125

★ Note: Not for German market !

Pinion with Straight Teeth

(Interface : Welded Plate(★)/ EN ISO 9409-1-A)

Quality DIN 4 / Alloy Steel
Tooth Thickness Tolerance : e24
Straight Teeth
Case Hardened and Teeth Ground

Bolt Circle Ø125

Mn	z(1)	x(2)	da(3)	d(4)	dw(5)	B1	L1	L(6)	Fig	Order Code
4	21	0.11	92.88	84	84.88	45	70	263.894	A	B04121A125
									C	B04121C125
									D	B04121D125
	24	0.202	105.616	96	97.616	45	70	301.593	A	B04124A125
									C	B04124C125
									D	B04124D125
5	13	0.366	78.66	65	68.66	55	80	204.204	A	B05113A125
									C	B05113C125
									D	B05113D125
	17	-0.012	94.88	85	84.88	55	80	267.035	C	B05117C125
									D	B05117D125
	19	0.049	105.49	95	95.49	55	80	298.451	A	B05119A125
									C	B05119C125
									D	B05119D125
6	13	0.366	94.392	78	82.392	65	90	245.044	A	B06113A125
									C	B06113C125
									D	B06113D125
	14	0.397	100.764	84	88.764	65	90	263.894	A	B06114A125
									D	B06114D125
	16	-0.042	107.496	96	95.496	65	90	301.593	A	B06116A125
									D	B06116D125

Bolt Circle Ø140

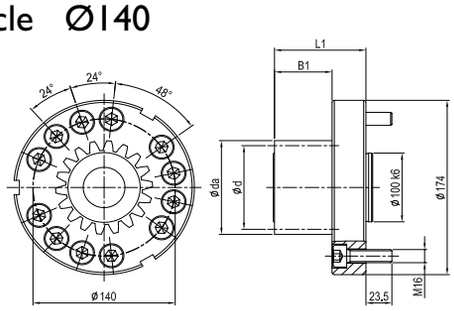

Fig. A

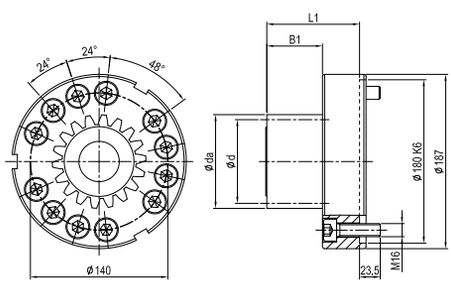

Fig. B

Mn	z(1)	x(2)	da(3)	d(4)	dw(5)	B1	L1	L(6)	Fig	Order Code
4	13	0.366	62.928	52	54.928	45	79	163.363	A	B04113A140
									B	B04113B140
	20	0.19	89.52	80	81.52	45	79	251.327	A	B04120A140
									B	B04120B140
	21	0.11	92.88	84	84.88	45	79	263.894	A	B04121A140
									B	B04121B140
5	15	0.227	87.27	75	77.27	55	89	235.619	A	B05115A140
									B	B05115B140
	20	0.08	110.8	100	100.8	55	89	314.159	A	B05120A140
									B	B05120B140
6	13	0.366	94.392	78	82.392	65	99	245.044	A	B06113A140
									B	B06113B140
	17	-0.012	113.856	102	101.856	65	99	320.442	A	B06117A140
									B	B06117B140

★ Note: Not for German market !

Pinion with Straight Teeth

(Interface : Welded Plate(★)/ EN ISO 9409-1-A)

Quality DIN 4 / Alloy Steel
Tooth Thickness Tolerance : e24
Straight Teeth
Case-Hardened and Teeth Ground

Bolt Circle Ø160

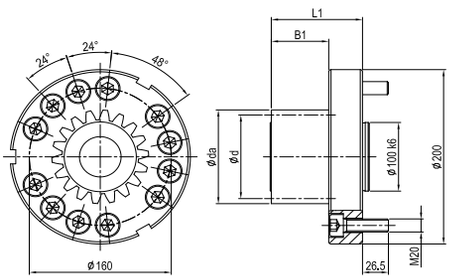

Fig. A

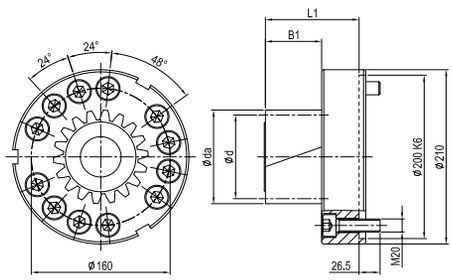

Fig. B

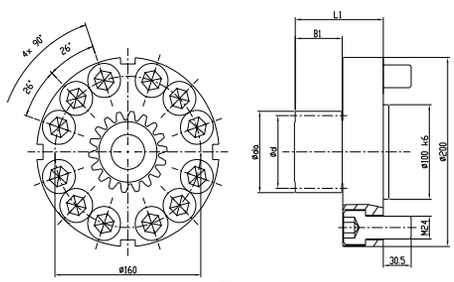

Fig. D

Mn	z(1)	x(2)	da(3)	d(4)	dw(5)	B1	L1	L(6)	Fig	Order Code
5	13	0.366	78.66	65	68.66	55	100	204.204	A	B05113A160
									B	B05113B160
									D	B05113D160
	20	.08	.8	110	100	100.8	55.159	100	314	A	B05120A160
									B	B05120B160
									D	B05120D160
6	13	0.366	94.392	78	82.392	65	110	245.044	A	B06113A160
									B	B06113B160
									D	B06113D160
	17	-0.012	113.856	102	101.856	65	110	320.442	A	B06117A160
									B	B06117B160
									D	B06117D160
	19	0.049	126.588	114	114.588	65	110	358.142	A	B06119A160
									B	B06119B160
8	13	0.366	125.856	104	109.856	85	130	326.726	A	B08113A160
									B	B08113B160

(1) Number of teeth (2) Profile modification factor (3) Diameter of addendum circle (4) Pitch circle diameter
(5) Working pitch circle diameter (6) Pitch circle length L =π x d

Pinion material carburized, the surface hardness reached 60 HRc
Teeth surface ground in order to reduce noise and improve wear resistance
Accessories include hexagon socket head cap screws (Strength 12.9 , DIN 912)

The maximum transmission torque is limited by cap screw, the permissible torque as below table:

PCD of Flange	Bolt / Screw Size	Max. Torque (Nm)
Ø 50	M6 x 8PCS	175
	M6 x 12PCS	265
Ø 63	M6 x 12PCS	335
	M8 x 12PCS	640
Ø 80	M8 x 12PCS	810
	M8 x 16PCS	1,160
Ø 125	M10 x 12PCS	2,055
	M10 x 16PCS	2,745
	M12 x 12PCS	3,060
Ø 140	M16 x 12PCS	6,620
Ø 145	M20 x 12PCS	10,885
Ø 160	M20 x 12PCS	12,000
	M24 x 12PCS	18,160

★ Note: Not for German market !

Pinion with Straight Teeth

(Interface : Welded Plate(★)/ EN ISO 9409-1-A)

Table of screw tightening torque

Screw	Screw tightening torque (Nm)
M5 x 0.8P	9.8
M6 x 1P	17
M8 x 1.25P	41
M10 x 1.5P	80
M12 x 1.75P	139
M16 x 2P	343
M20 x 2.5P	692
M24 x 3P	1,190
M30 x 3.5P	2,380
M36 x 4P	4,136

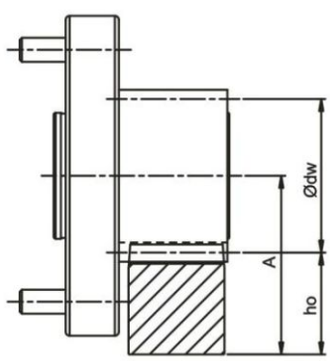

$$A = ho + \frac{\phi\, dw}{2}$$

In Table 10, the maximum permissible torque of the pinion Welded Plate and the rack is calculated on the basis of a speed of 1.5 m/s and providing good lubrication (using an automatic lubrication system or manually applied grease every day), the tooth root strength factor $S_F \geqq 1.4$, tooth surface strength coefficient $S_H \geqq 1$, the safety factor $S_B \fallingdotseq 1$, and the required service life of 20,000 hours. By higher speed, the max. permissible torque reduced. The user needs to increase the safety factor for the application. Backlash changes by different center height. Please contact APEX under WWW.APEXDYNA.COM.

★ Note: Not for German market !

Pinion with Straight Teeth

(Interface : Welded Plate(★)/ EN ISO 9409-1-A)

Table 10. The max. permitted torque and feed-force of pinion Welded Plate

Pinion \ Rack			Quality	Q4	Q5	Q6	Q6M	Q8H	Q8	Q9	Q10
			Material	Carbon Steel	Carbon Steel	Carbon Steel	Carbon Steel	Q&T Alloy Steel	Carbon Steel	Stainless Steel	Carbon Steel
			Heat Treatment	Induction Hardening	Induction Hardening	Induction Hardening	Induction Hardening	Quenched Tempered	Normalizing	Solution	Induction Hardening
Mn	z(1)	dw(5)	Max. Torque * and Feed-Force								
2	13	27.264	F_{2T}(8) (N)		4,231	4,231	4,231	1,538	769	385	1,923
			T_{2B}(9) (Nm)		55	55	55	20	10	5	25
	17	33.952	F_{2T}(8) (N)		5,000	5,000	5,000	2,353	1,471	588	2,059
			T_{2B}(9) (Nm)		85	85	85	40	25	10	35
	24	48.808	F_{2T}(8) (N)		6,875	6,875	6,875	2,292	1,458	833	3,542
			T_{2B}(9) (Nm)		165	165	165	55	35	20	85
3	13	41.196	F_{2T}(8) (N)		8,462	8,462	8,462	3,333	2,051	1,025	4,615
			T_{2B}(9) (Nm)		165	165	165	65	40	20	90
	20	60.48	F_{2T}(8) (N)		13,667	13,333	13,333	4,500	2,333	1,333	10,000
			T_{2B}(9) (Nm)		410	400	400	135	70	40	300
	27	82.764	F_{2T}(8) (N)		13,333	13,086	13,086	7,654	4,074	1,728	9,630
			T_{2B}(9) (Nm)		540	530	530	310	165	70	390
	33	101.862	F_{2T}(8) (N)		13,131	12,828	12,828	9,596	5,960	1,717	9,394
			T_{2B}(9) (Nm)		650	635	635	475	295	85	465
4	13	54.928	F_{2T}(8) (N)		16,154	16,154	16,154	7,692	3,846	1,923	10,192
			T_{2B}(9) (Nm)		420	420	420	200	100	50	265
	20	81.52	F_{2T}(8) (N)		24,375	24,000	24,000	10,125	4,375	2,375	19,500
			T_{2B}(9) (Nm)		975	960	960	405	175	95	780
	21	84.88	F_{2T}(8) (N)		24,643	24,286	24,286	11,190	5,000	2,500	19,167
			T_{2B}(9) (Nm)		1,035	1,020	1,020	470	210	105	805
	24	97.616	F_{2T}(8) (N)		24,479	24,063	24,063	13,542	6,979	2,813	18,854
			T_{2B}(9) (Nm)		1,175	1,155	1,155	650	335	135	905
5	13	68.66	F_{2T}(8) (N)	26,461	26,461	25,846	25,846		7,385	3,231	18,462
			T_{2B}(9) (Nm)	860	860	840	840		240	105	600
	15	77.27	F_{2T}(8) (N)	30,533	30,533	29,867	29,867		9,867	3,867	22,133
			T_{2B}(9) (Nm)	1,145	1,145	1,120	1,120		370	145	830
	17	84.88	F_{2T}(8) (N)	31,647	31,647	30,941	30,941		12,706	4,471	22,706
			T_{2B}(9) (Nm)	1,345	1,345	1,315	1,315		540	190	965
	19	95.49	F_{2T}(8) (N)	39,368	39,368	38,947	38,947		15,052	5,158	31,053
			T_{2B}(9) (Nm)	1,870	1,870	1,850	1,850		715	245	1,745
	20	100.8	F_{2T}(8) (N)	38,900	38,900	38,500	38,500		9,700	3,800	32,500
			T_{2B}(9) (Nm)	1,945	1,945	1,925	1,925		485	190	1,625
6	13	82.392	F_{2T}(8) (N)	38,974	38,974	38,462	38,462		12,179	4,872	29,487
			T_{2B}(9) (Nm)	1,520	1,520	1,500	1,500		475	190	1,150
	14	88.764	F_{2T}(8) (N)	44,286	44,286	43,929	43,929		13,690	6,548	34,881
			T_{2B}(9) (Nm)	1,860	1,860	1,845	1,845		575	275	1,465
	16	95.496	F_{2T}(8) (N)	39,271	39,271	38,646	38,646		17,917	6,979	29,792
			T_{2B}(9) (Nm)	1,885	1,885	1,855	1,855		860	335	1,430
	17	101.856	F_{2T}(8) (N)	46,176	46,176	45,784	45,784		20,294	8,039	36,471
			T_{2B}(9) (Nm)	2,355	2,355	2,335	2,335		1,035	410	1,860
	19	114.588	F_{2T}(8) (N)	57,456	57,456	57,368	57,368		23,860		47,982
			T_{2B}(9) (Nm)	3,275	3,275	3,270	3,270		1,360		2,735
8	13	109.856	F_{2T}(8) (N)	70,769	70,769	70,769	70,769		25,962		59,615
			T_{2B}(9) (Nm)	3,680	3,680	3,680	3,680		1,350		3,100

* The Maximal Driving Torque is also to be understood as the Maximal Acceleration Torque T_{2B}.

The Emergency Stop Torque $T_{2NOT} = 2 \times T_{2B}$, under the condition limited 1000 times in the whole service period.

(1) Number of Teeth (5) Working Pitch Circle Diameter (in mm) (8) Maximum Feed-Force (9) Maximum Driving Torque

Note : The strength of screws is a limitation of the max. transmission torque. For Pinion Welded Plate, please refer to Page .40.

★ Note: Not for German market !

Pinion with Straight Teeth

(Interface : Keyway)

Quality DIN 5 / Alloy Steel

Tooth Thickness Tolerance : e25

Straight Teeth

Case-Hardened and Teeth Ground

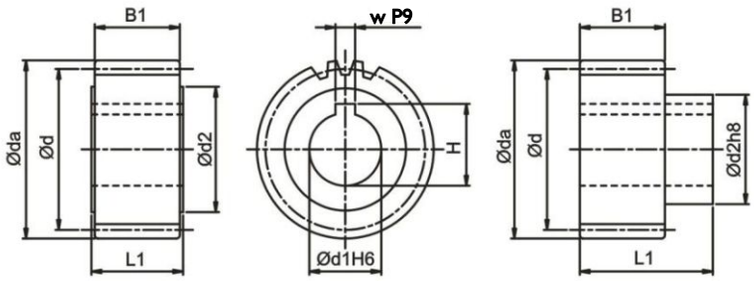

Fig. A

Fig. B

Module 1

z(1)	x(2)	da(3)	d(4)	dw(5)	d1 H6	d2	B1	L1	w P9	H	L(6)	Fig	Order code	
													Pinion	Shrink disc
30	0	32	30	30	12	22	17	19	4	13.8	94.248	A	F01130A12	
30	0	32	30	30	13	22	17	19	5	15.3	94.248	A	F01130A13	

Module 1.5

z(1)	x(2)	da(3)	d(4)	dw(5)	d1 H6	d2	B1	L1	w P9	H	L(6)	Fig	Order code	
													Pinion	Shrink disc
20(7)	0	33	30	30	11	25	20	22	4	12.8	94.248	A	F1J120A11	
20(7)	0	33	30	30	14	25	20	22	5	16.3	94.248	A	F1J120A14	
20(7)	0	33	30	30	16	25	20	22	5	18.3	94.248	A	F1J120A16	

Module 2

z(1)	x(2)	da(3)	d(4)	dw(5)	d1 H6	d2	B1	L1	w P9	H	L(6)	Fig	Order code	
													Pinion	Shrink disc
16	0	36	32	32	15	25	28	30	5	17.3	100.531	A	F02116A15	
18	0	40	36	36	15	28	28	30	5	17.3	113.097	A	F02118A15	
18	0	40	36	36	20	28	28	30	6	22.8	113.097	A	F02118A20	
20	0	44	40	40	15	25	28	30	5	17.3	125.664	A	F02120A15	
20	0	44	40	40	19	30	28	30	6	21.8	125.664	A	F02120A19	
20	0	44	40	40	19	30	28	56	6	21.8	125.664	B	F02120B19	SSD-30
20	0	44	40	40	20	30	28	30	6	22.8	125.664	A	F02120A20	
20	0	44	40	40	22	30	28	30	6	24.8	125.664	A	F02120A22	
20	0	44	40	40	22	36	28	56	6	24.8	125.664	B	F02120B22	SSD-36
22	0	48	44	44	15	25	28	30	5	17.3	138.23	A	F02122A15	
22	0	48	44	44	19	30	28	30	6	21.8	138.23	A	F02122A19	
22	0	48	44	44	19	30	28	56	6	21.8	138.23	B	F02122B19	SSD-30
22	0	48	44	44	20	30	28	30	6	22.8	138.23	A	F02122A20	
22	0	48	44	44	22	30	28	30	6	24.8	138.23	A	F02122A22	
22	0	48	44	44	22	36	28	56	6	24.8	138.23	B	F02122B22	SSD-36
22	0	48	44	44	25	36	28	30	8	28.3	138.23	A	F02122A25	
25	0	54	50	50	15	25	28	30	5	17.3	157.08	A	F02125A15	
25	0	54	50	50	16	30	28	54	5	18.3	157.08	B	F02125B16	SSD-30
25	0	54	50	50	19	30	28	30	6	21.8	157.08	A	F02125A19	
25	0	54	50	50	19	30	28	56	6	21.8	157.08	B	F02125B19	SSD-30
25	0	54	50	50	20	30	28	30	6	22.8	157.08	A	F02125A20	
25	0	54	50	50	22	30	28	30	6	24.8	157.08	A	F02125A22	
25	0	54	50	50	22	36	28	56	6	24.8	157.08	B	F02125B22	SSD-36
25	0	54	50	50	25	36	28	30	8	28.3	157.08	A	F02125A25	
25	0	54	50	50	30	44	28	30	8	33.3	157.08	A	F02125A30	
28	0	60	56	56	15	25	28	30	5	17.3	175.929	A	F02128A15	
28	0	60	56	56	19	30	28	30	6	21.8	175.929	A	F02128A19	
28	0	60	56	56	19	30	28	56	6	21.8	175.929	B	F02128B19	SSD-30
28	0	60	56	56	20	30	28	30	6	22.8	175.929	A	F02128A20	
28	0	60	56	56	22	30	28	30	6	24.8	175.929	A	F02128A22	
28	0	60	56	56	22	36	28	56	6	24.8	175.929	B	F02128B22	SSD-36
28	0	60	56	56	25	36	28	30	8	28.3	175.929	A	F02128A25	
28	0	60	56	56	30	45	28	30	8	33.3	175.929	A	F02128A30	
28	0	60	56	56	30	50	28	60	8	33.3	175.929	B	F02128B30	SSD-50
28	0	60	56	56	35	48	28	30	10	38.3	175.929	A	F02128A35	

(1) Number of teeth (2) Profile modification factor (3) Diameter of addendum circle (4) Pitch circle diameter
(5) Working pitch circle diameter (6) Pitch circle length L = π x d

Pinion with Straight Teeth
(Interface : Keyway)

Quality DIN 5 / Alloy Steel
Tooth Thickness Tolerance : e25
Straight Teeth
Case-Hardened and Teeth Ground

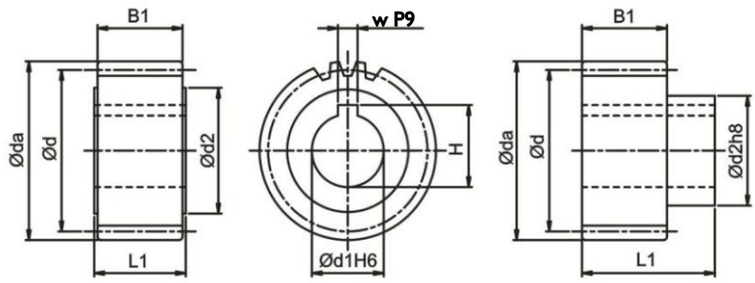

Fig. A Fig. B

Module 2

z(1)	x(2)	da(3)	d(4)	dw(5)	d1 H6	d2	B1	L1	w P9	H	L(6)	Fig	Order code	
													Pinion	Shrink disc
32	0	68	64	64	15	36	28	30	5	17.3	201.062	A	F02132A15	
32	0	68	64	64	16	30	28	54	5	18.3	201.062	B	F02132B16	SSD-30
32	0	68	64	64	20	30	28	30	6	22.8	201.062	A	F02132A20	
32	0	68	64	64	22	30	28	30	6	24.8	201.062	A	F02132A22	
32	0	68	64	64	22	36	28	56	6	24.8	201.062	B	F02132B22	SSD-36
32	0	68	64	64	25	36	28	30	8	28.3	201.062	A	F02132A25	
32	0	68	64	64	30	45	28	30	8	33.3	201.062	A	F02132A30	
32	0	68	64	64	30	50	28	60	8	33.3	201.062	B	F02132B30	SSD-50
32	0	68	64	64	32	55	28	65	10	35.3	201.062	B	F02132B32	SSD-55
32	0	68	64	64	35	48	28	30	10	38.3	201.062	A	F02132A35	
36	0	76	72	72	20	30	28	30	6	22.8	226.195	A	F02136A20	
36	0	76	72	72	25	36	28	30	8	28.3	226.195	A	F02136A25	
36	0	76	72	72	30	45	28	30	8	33.3	226.195	A	F02136A30	
36	0	76	72	72	35	48	28	30	10	38.3	226.195	A	F02136A35	
36	0	76	72	72	40	62	28	65	12	43.3	226.195	B	F02136B40	SSD-62
36	0	76	72	72	45	58	28	30	14	48.8	226.195	A	F02136A45	
40	0	84	80	80	15	36	28	30	5	17.3	251.327	A	F02140A15	
40	0	84	80	80	20	30	28	30	6	22.8	251.327	A	F02140A20	
40	0	84	80	80	25	36	28	30	8	28.3	251.327	A	F02140A25	
40	0	84	80	80	30	45	28	30	8	33.3	251.327	A	F02140A30	
40	0	84	80	80	32	55	28	65	10	35.3	251.327	B	F02140B32	SSD-55
40	0	84	80	80	35	48	28	30	10	38.3	251.327	A	F02140A35	
40	0	84	80	80	40	62	28	65	12	43.3	251.327	B	F02140B40	SSD-62
40	0	84	80	80	45	58	28	30	14	48.8	251.327	A	F02140A45	
40	0	84	80	80	45	68	28	65	14	48.8	251.327	B	F02140B45	SSD-68
45	0	94	90	90	20	30	28	30	6	22.8	282.743	A	F02145A20	
45	0	94	90	90	25	36	28	30	8	28.3	282.743	A	F02145A25	
45	0	94	90	90	35	48	28	30	10	38.3	282.743	A	F02145A35	
45	0	94	90	90	45	58	28	30	14	48.8	282.743	A	F02145A45	
50	0	104	100	100	20	30	28	30	6	22.8	314.159	A	F02150A20	
50	0	104	100	100	25	36	28	30	8	28.3	314.159	A	F02150A25	
50	0	104	100	100	35	48	28	30	10	38.3	314.159	A	F02150A35	
50	0	104	100	100	45	58	28	30	14	48.8	314.159	A	F02150A45	
50	0	104	100	100	45	68	28	65	14	48.8	314.159	B	F02150B45	SSD-68
56	0	116	112	112	25	36	28	30	8	28.3	351.858	A	F02156A25	
56	0	116	112	112	35	48	28	30	10	38.3	351.858	A	F02156A35	
63	0	130	126	126	25	36	28	30	8	28.3	395.841	A	F02163A25	
71	0	146	142	142	35	48	28	30	10	38.3	446.106	A	F02171A35	
80	0	164	160	160	35	48	28	30	10	38.3	502.655	A	F02180A35	
90	0	184	180	180	45	58	28	30	14	48.8	565.487	A	F02190A45	

Quality DIN 5 / Alloy Steel

Tooth Thickness Tolerance : e25

Straight Teeth

Case-Hardened and Teeth Ground

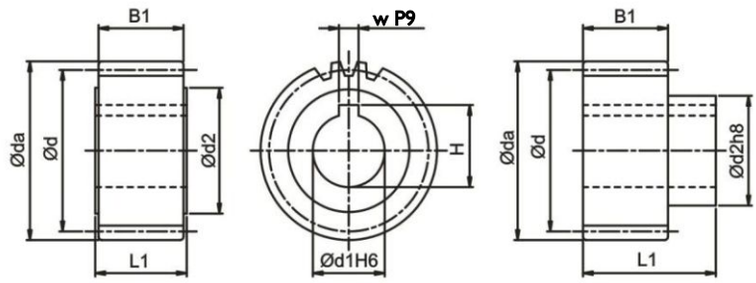

Fig. A Fig. B

Module 3

z(1)	x(2)	da(3)	d(4)	dw(5)	d1 H6	d2	B1	L1	w P9	H	L(6)	Fig	Order code	
													Pinion	Shrink disc
18	0	60	54	54	25	36	28	30	8	28.3	169.646	A	F03118A25	
20	0	66	60	60	25	36	28	30	8	28.3	188.496	A	F03120A25	
20	0	66	60	60	30	45	28	30	8	33.3	188.496	A	F03120A30	
20	0	66	60	60	35	48	28	30	10	38.3	188.496	A	F03120A35	
22	0	72	66	66	22	36	28	56	6	24.8	207.345	B	F03122B22	SSD-36
22	0	72	66	66	25	36	28	30	8	28.3	207.345	A	F03122A25	
22	0	72	66	66	25	44	28	60	8	28.3	207.345	B	F03122B25	SSD-44
22	0	72	66	66	30	45	28	30	8	33.3	207.345	A	F03122A30	
22	0	72	66	66	30	50	28	60	8	33.3	207.345	B	F03122B30	SSD-50
22	0	72	66	66	32	55	28	65	10	35.3	207.345	B	F03122B32	SSD-55
22	0	72	66	66	35	48	28	30	10	38.3	207.345	A	F03122A35	
22	0	72	66	66	35	55	28	65	10	38.3	207.345	B	F03122B35	SSD-55
22	0	72	66	66	40	62	28	65	12	43.3	207.345	B	F03122B40	SSD-62
25	0	81	75	75	25	36	28	30	8	28.3	235.619	A	F03125A25	
25	0	81	75	75	30	45	28	30	8	33.3	235.619	A	F03125A30	
25	0	81	75	75	32	55	28	65	10	35.3	235.619	B	F03125B32	SSD-55
25	0	81	75	75	35	48	28	30	10	38.3	235.619	A	F03125A35	
25	0	81	75	75	40	62	28	65	12	43.3	235.619	B	F03125B40	SSD-62
25	0	81	75	75	45	58	28	30	14	48.8	235.619	A	F03125A45	
28	0	90	84	84	22	36	28	56	6	24.8	263.894	B	F03128B22	SSD-36
28	0	90	84	84	25	36	28	30	8	28.3	263.894	A	F03128A25	
28	0	90	84	84	25	44	28	60	8	28.3	263.894	B	F03128B25	SSD-44
28	0	90	84	84	30	45	28	30	8	33.3	263.894	A	F03128A30	
28	0	90	84	84	30	50	28	60	8	33.3	263.894	B	F03128B30	SSD-50
28	0	90	84	84	32	55	28	65	10	35.3	263.894	B	F03128B32	SSD-55
28	0	90	84	84	35	48	28	30	10	38.3	263.894	A	F03128A35	
28	0	90	84	84	35	55	28	65	10	38.3	263.894	B	F03128B35	SSD-55
28	0	90	84	84	40	62	28	65	12	43.3	263.894	B	F03128B40	SSD-62
28	0	90	84	84	45	58	28	30	14	48.8	263.894	A	F03128A45	
28	0	90	84	84	45	68	28	65	14	48.8	263.894	B	F03128B45	SSD-68

(1) Number of teeth (2) Profile modification factor (3) Diameter of addendum circle (4) Pitch circle diameter
(5) Working pitch circle diameter (6) Pitch circle length $L = \pi \times d$

Pinion with Straight Teeth

(Interface : Keyway)

Quality DIN 5 / Alloy Steel

Tooth Thickness Tolerance : e25

Straight Teeth

Case-Hardened and Teeth Ground

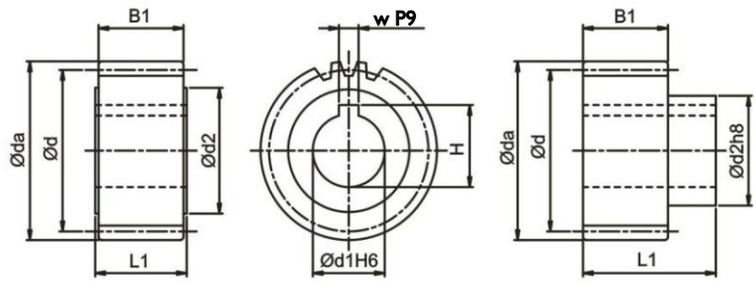

Fig. A

Fig. B

Module 3

z(1)	x(2)	da(3)	d(4)	dw(5)	d1 H6	d2	B1	L1	w P9	H	L(6)	Fig	Order code	
													Pinion	Shrink disc
32	0	102	96	96	25	36	28	30	8	28.3	301.593	A	F03132A25	
32	0	102	96	96	30	45	28	30	8	33.3	301.593	A	F03132A30	
32	0	102	96	96	32	55	28	65	10	35.3	301.593	B	F03132B32	SSD-55
32	0	102	96	96	35	48	28	30	10	38.3	301.593	A	F03132A35	
32	0	102	96	96	40	62	28	65	12	43.3	301.593	B	F03132B40	SSD-62
32	0	102	96	96	45	58	28	30	14	48.8	301.593	A	F03132A45	
32	0	102	96	96	60	80	28	30	18	64.4	301.593	A	F03132A60	
36	0	114	108	108	25	36	28	30	8	28.3	339.292	A	F03136A25	
36	0	114	108	108	35	48	28	30	10	38.3	339.292	A	F03136A35	
36	0	114	108	108	45	58	28	30	14	48.8	339.292	A	F03136A45	
36	0	114	108	108	45	68	28	65	14	48.8	339.292	B	F03136B45	SSD-68
36	0	114	108	108	60	80	28	30	18	64.4	339.292	A	F03136A60	
40	0	126	120	120	25	36	28	30	8	28.3	376.991	A	F03140A25	
40	0	126	120	120	35	48	28	30	10	38.3	376.991	A	F03140A35	
40	0	126	120	120	45	58	28	30	14	48.8	376.991	A	F03140A45	
40	0	126	120	120	60	80	28	30	18	64.4	376.991	A	F03140A60	
45	0	141	135	135	25	36	28	30	8	28.3	424.115	A	F03145A25	
45	0	141	135	135	35	48	28	30	10	38.3	424.115	A	F03145A35	
45	0	141	135	135	45	58	28	30	14	48.8	424.115	A	F03145A45	
45	0	141	135	135	60	80	28	30	18	64.4	424.115	A	F03145A60	
50	0	156	150	150	35	48	28	30	10	38.3	471.239	A	F03150A35	
50	0	156	150	150	45	58	28	30	14	48.8	471.239	A	F03150A45	
56	0	174	168	168	45	58	28	30	14	48.8	527.788	A	F03156A45	
63	0	195	189	189	45	58	28	30	14	48.8	593.761	A	F03163A45	
63	0	195	189	189	60	80	28	30	18	64.4	593.761	A	F03163A60	

Quality DIN 5 / Alloy Steel
Tooth Thickness Tolerance : e25
Straight Teeth
Case-Hardened and Teeth Ground

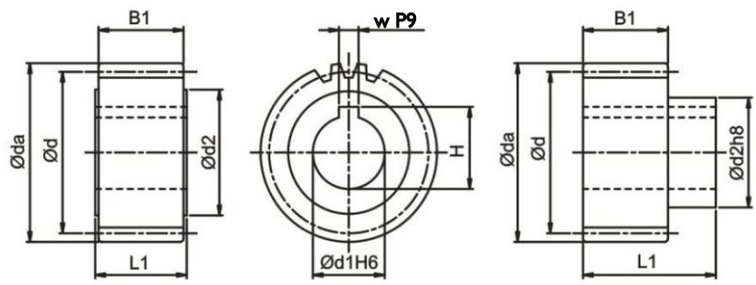

Fig. A Fig. B

Module 4

z(1)	x(2)	da(3)	d(4)	dw(5)	d1 H6	d2	B1	L1	w P9	H	L(6)	Fig	Order code	
													Pinion	Shrink disc
20	0	88	80	80	32	55	40	75	10	35.3	251.327	B	F04120B32	SSD-55
20	0	88	80	80	35	52	40	50	10	38.3	251.327	A	F04120A35	
20	0	88	80	80	35	55	40	75	10	38.3	251.327	B	F04120B35	SSD-55
20	0	88	80	80	40	62	40	75	12	43.3	251.327	B	F04120B40	SSD-62
20	0	88	80	80	45	65	40	50	14	48.8	251.327	A	F04120A45	
22	0	96	88	88	35	52	40	50	10	38.3	276.46	A	F04122A35	
22	0	96	88	88	45	65	40	50	14	48.8	276.46	A	F04122A45	
22	0	96	88	88	45	68	40	75	14	48.8	276.46	B	F04122B45	SSD-68
25	0	108	100	100	32	55	40	75	10	35.3	314.159	B	F04125B32	SSD-55
25	0	108	100	100	35	52	40	50	10	38.3	314.159	A	F04125A35	
25	0	108	100	100	35	55	40	75	10	38.3	314.159	B	F04125B35	SSD-55
25	0	108	100	100	40	62	40	75	12	43.3	314.159	B	F04125B40	SSD-62
25	0	108	100	100	45	65	40	50	14	48.8	314.159	A	F04125A45	
25	0	108	100	100	55	80	40	80	16	59.3	314.159	B	F04125B55	SSD-80
28	0	120	112	112	35	52	40	50	10	38.3	351.858	A	F04128A35	
28	0	120	112	112	45	65	40	50	14	48.8	351.858	A	F04128A45	
28	0	120	112	112	45	68	40	75	14	48.8	351.858	B	F04128B45	SSD-68
32	0	136	128	128	35	52	40	50	10	38.3	402.124	A	F04132A35	
32	0	136	128	128	45	65	40	50	14	48.8	402.124	A	F04132A45	
32	0	136	128	128	55	80	40	80	16	59.3	402.124	B	F04132B55	SSD-80
32	0	136	128	128	75	110	40	100	20	79.9	402.124	B	F04132B75	SSD-110
40	0	168	160	160	45	65	40	50	14	48.8	502.655	A	F04140A45	
40	0	168	160	160	60	80	40	50	18	64.4	502.655	A	F04140A60	
40	0	168	160	160	75	110	40	100	20	79.9	502.655	B	F04140B75	SSD-110

Module 5

z(1)	x(2)	da(3)	d(4)	dw(5)	d1 H6	d2	B1	L1	w P9	H	L(6)	Fig	Order code	
													Pinion	Shrink disc
21	0	115	105	105	45	68	50	85	14	48.8	329.867	B	F05121B45	SSD-68
21	0	115	105	105	55	80	50	90	16	59.3	329.867	B	F05121B55	SSD-80
25	0	135	125	125	45	68	50	85	14	48.8	392.699	B	F05125B45	SSD-68
25	0	135	125	125	55	80	50	90	16	59.3	392.699	B	F05125B55	SSD-80
25	0	135	125	125	75	110	50	110	20	79.9	392.699	B	F05125B75	SSD-110

(1) Number of teeth (2) Profile modification factor (3) Diameter of addendum circle (4) Pitch circle diameter
(5) Working pitch circle diameter (6) Pitch circle length $L = \pi \times d$

Pinion with Straight Teeth
(Interface : Keyway)

Quality DIN 5 / Alloy Steel
Tooth Thickness Tolerance : e25 **
Straight Teeth
Case-Hardened and Teeth Ground

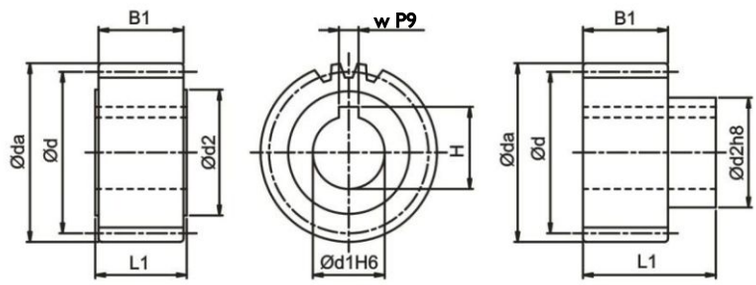

Fig. A Fig. B

Module 6

z(1)	x(2)	da(3)	d(4)	dw(5)	d1 H6	d2	B1	L1	w P9	H	L(6)	Fig	Order code	
													Pinion	Shrink disc
21	0	138	126	126	55	80	60	100	16	59.3	395.841	B	F06121B55	SSD-80
21	0	138	126	126	75	110	60	120	20	79.9	395.841	B	F06121B75	SSD-110
25	0	162	150	150	55	80	60	100	16	59.3	471.239	B	F06125B55	SSD-80
25	0	162	150	150	75	110	60	120	20	79.9	471.239	B	F06125B75	SSD-110

Module 8

z(1)	x(2)	da(3)	d(4)	dw(5)	d1 H6	d2	B1	L1	w P9	H	L(6)	Fig	Order code	
													Pinion	Shrink disc
20	0	176	160	160	75	110	80	140	20	79.9	502.655	B	F08120B75	SSD-110
20	0	176	160	160	85	125	80	145	22	90.4	502.655	B	F08120B85	SSD-125

Module 10

z(1)	x(2)	da(3)	d(4)	dw(5)	d1 H6	d2	B1	L1	w P9	H	L(6)	Fig	Order code	
													Pinion	Shrink disc
20	0	220	200	200	85	125	100	165	22	90.4	628.319	B	F10120B85	SSD-125

** By Module 8 or 10, the Tooth Thickness Tolerance = f 23.
(1) Number of teeth (2) Profile modification factor (3) Diameter of addendum circle
(4) Pitch circle diameter (5) Working pitch circle diameter (6) Pitch circle length L = π x d

Pinion material carburized, the surface hardness reached 60 HRc
Teeth surface ground in order to reduce noise and improve wear resistance
Accessories include hexagon socket head cap screws（Strength 12.9，DIN 912）

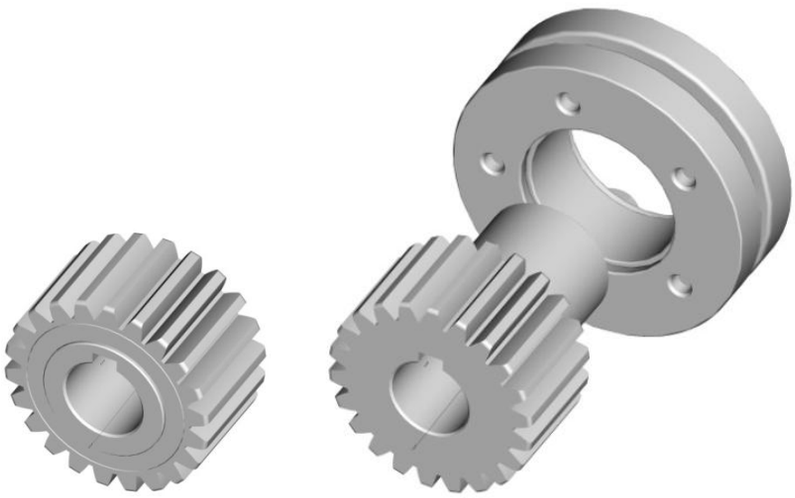

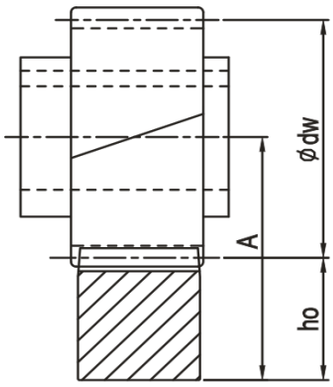

$$A = ho + \frac{\phi\, dw}{2}$$

In Table 11, the maximum permissible torque of pinion with Keyway, and the rack is calculated on the basis of a speed of 1.5 m/s and providing good lubrication (using an automatic lubrication system or manually applied grease every day), the tooth root strength factor $S_F \geqq 1.4$, tooth surface strength coefficient $S_H \geqq 1$, the safety factor $S_B \fallingdotseq 1$, and the required service life of 20,000 hours. By higher speed, the max. permissible torque reduced. The user needs to increase the safety factor for the application.
Backlash changes by different center height. Please contact APEX under WWW.APEXDYNA.COM.

Pinion with Straight Teeth

(Interface : Keyway)

Table 11. The max. permitted torque and feed-force of pinion with Keyway

Pinion \ Rack			Quality	Q4	Q5	Q6	Q6M	Q8H	Q8	Q9	Q10
			Material	Carbon Steel	Carbon Steel	Carbon Steel	Carbon Steel	Q&T Alloy Steel	Carbon Steel	Stainless Steel	Carbon Steel
			Heat Treatment	Induction Hardening	Induction Hardening	Induction Hardening	Induction Hardening	Quenched Tempered	Normalizing	Solution	Induction Hardening
Mn	z(1)	dw(5)	Max. Torque * and Feed-Force								
1	30	30	F_{2T}(8) (N)			2,000			333	333	667
			T_{2B}(9) (Nm)			30			5	5	10
1.5	20	30	F_{2T}(8) (N)						667		1,333
			T_{2B}(9) (Nm)						10		20
2	16	32	F_{2T}(8) (N)		4,375	4,375	4,375	1,875	1,250	625	1,563
			T_{2B}(9) (Nm)		70	70	70	30	20	10	25
	18	36	F_{2T}(8) (N)		5,556	5,556	5,556	1,944	1,389	556	1,944
			T_{2B}(9) (Nm)		100	100	100	35	25	10	35
	20	40	F_{2T}(8) (N)		7,000	7,000	7,000	1,500	1,000	500	2,250
			T_{2B}(9) (Nm)		140	140	140	30	20	10	45
	22	44	F_{2T}(8) (N)		7,045	7,045	7,045	1,591	1,136	682	2,273
			T_{2B}(9) (Nm)		155	155	155	35	25	15	50
	25	50	F_{2T}(8) (N)		7,200	7,200	7,200	2,000	1,200	800	2,200
			T_{2B}(9) (Nm)		180	180	180	50	30	20	55
	28	56	F_{2T}(8) (N)		7,143	7,143	7,143	2,143	1,429	714	2,321
			T_{2B}(9) (Nm)		200	200	200	60	40	20	65
	32	64	F_{2T}(8) (N)		7,344	7,188	7,188	2,656	1,719	781	2,188
			T_{2B}(9) (Nm)		235	230	230	85	55	25	70
	36	72	F_{2T}(8) (N)		7,222	7,222	7,222	3,472	2,083	694	2,222
			T_{2B}(9) (Nm)		260	260	260	125	75	25	80
	40	80	F_{2T}(8) (N)		7,250	7,125	7,125	3,375	2,250	750	2,125
			T_{2B}(9) (Nm)		290	285	285	135	90	30	85
	45	90	F_{2T}(8) (N)		7,333	7,111	7,111	3,333	2,333	667	2,111
			T_{2B}(9) (Nm)		365	320	320	150	105	30	95
	50	100	F_{2T}(8) (N)		7,300	7,000	7,000	3,200	2,300	700	2,100
			T_{2B}(9) (Nm)		365	350	350	160	115	35	105
	56	112	F_{2T}(8) (N)		7,321	6,964	6,964	3,214	2,321	714	2,054
			T_{2B}(9) (Nm)		410	390	390	180	130	40	115
	63	126	F_{2T}(8) (N)		7,460	6,825	6,825	3,016	2,222	714	2,063
			T_{2B}(9) (Nm)		470	430	430	190	140	45	130
	71	142	F_{2T}(8) (N)		7,606	6,901	6,901	3,169	2,254	704	2,042
			T_{2B}(9) (Nm)		540	490	490	225	160	50	145
	80	160	F_{2T}(8) (N)		7,813	7,000	7,000	3,250	2,313	750	2,063
			T_{2B}(9) (Nm)		625	560	560	260	185	60	165
	90	180	F_{2T}(8) (N)		8,000	7,167	7,167	3,389	2,333	722	2,056
			T_{2B}(9) (Nm)		720	645	645	305	210	65	185
3	18	54	F_{2T}(8) (N)		11,481	11,111	11,111	4,630	2,222	1,296	3,704
			T_{2B}(9) (Nm)		310	300	300	125	60	35	100
	20	60	F_{2T}(8) (N)		13,667	13,333	13,333	2,833	1,833	1,000	5,167
			T_{2B}(9) (Nm)		410	400	400	85	55	30	155
	22	66	F_{2T}(8) (N)		13,788	13,636	13,636	3,333	1,970	1,061	6,667
			T_{2B}(9) (Nm)		455	450	450	110	65	35	220
	25	75	F_{2T}(8) (N)		13,867	13,600	13,600	4,800	2,400	1,333	6,667
			T_{2B}(9) (Nm)		520	510	510	180	90	50	250

* The Maximal Driving Torque is also to be understood as the Maximal Acceleration Torque T_{2B}.
The Emergency Stop Torque $T_{2NOT} = 2 \times T_{2B}$, under the condition limited 1000 times in the whole service period.

(1) Number of Teeth (5) Working Pitch Circle Diameter (in mm) (8) Maximum Feed-Force (9) Maximum Driving Torque

Table 11. The max. permitted torque and feed-force of pinion with Keyway

Pinion \ Rack			Quality	Q4	Q5	Q6	Q6M	Q8H	Q8	Q9	Q10
			Material	Carbon Steel	Carbon Steel	Carbon Steel	Carbon Steel	Q&T Alloy Steel	Carbon Steel	Stainless Steel	Carbon Steel
			Heat Treatment	Induction Hardening	Induction Hardening	Induction Hardening	Induction Hardening	Quenched Tempered	Normalizing	Solution	Induction Hardening
Mn	z(1)	dw(5)		Max. Torque * and Feed-Force							
3	28	84	F_{2T}(8) (N)		13,929	13,690	13,690	6,310	2,738	1,429	6,429
			T_{2B}(9) (Nm)		585	575	575	265	115	60	270
	32	96	F_{2T}(8) (N)		13,958	13,646	13,646	8,438	3,542	1,354	6,146
			T_{2B}(9) (Nm)		670	655	655	405	170	65	295
	36	108	F_{2T}(8) (N)		13,981	13,704	13,704	8,981	4,722	1,389	5,833
			T_{2B}(9) (Nm)		755	740	740	485	255	75	315
	40	120	F_{2T}(8) (N)		14,167	13,833	13,833	9,000	6,167	1,333	5,833
			T_{2B}(9) (Nm)		850	830	830	540	370	80	350
	45	135	F_{2T}(8) (N)		14,444	14,148	14,148	9,259	6,667	1,333	5,852
			T_{2B}(9) (Nm)		975	955	955	625	450	90	395
	50	150	F_{2T}(8) (N)		14,733	14,400	14,400	9,533	6,800	1,400	5,933
			T_{2B}(9) (Nm)		1,105	1,080	1,080	715	510	105	445
	56	168	F_{2T}(8) (N)		15,000	14,643	14,643	9,762	6,964	1,369	6,012
			T_{2B}(9) (Nm)		1,260	1,230	1,230	820	585	115	505
	63	189	F_{2T}(8) (N)		15,291	14,974	14,974	10,053	7,196	1,429	6,085
			T_{2B}(9) (Nm)		1,445	1,415	1,415	950	680	135	575
4	20	80	F_{2T}(8) (N)		25,000	24,625	24,625	7,125	3,625	1,750	1,1875
			T_{2B}(9) (Nm)		1,000	985	985	285	145	70	475
	22	88	F_{2T}(8) (N)		25,114	24,659	24,659	8,864	4,091	2,045	11,932
			T_{2B}(9) (Nm)		1,105	1,085	1,085	390	180	90	525
	25	100	F_{2T}(8) (N)		25,200	24,800	24,800	11,900	5,300	2,200	11,300
			T_{2B}(9) (Nm)		1,260	1,240	1,240	595	265	110	565
	28	112	F_{2T}(8) (N)		25,268	24,821	24,821	15,089	6,518	2,143	11,161
			T_{2B}(9) (Nm)		1,415	1,390	1,390	845	365	120	625
	32	128	F_{2T}(8) (N)		25,781	25,391	25,391	16,953	8,594	2,188	11,250
			T_{2B}(9) (Nm)		1,650	1,625	1,625	1,085	550	140	720
	40	160	F_{2T}(8) (N)		26,813	26,438	26,438	17,813	12,438	2,250	11,563
			T_{2B}(9) (Nm)		2,145	2,115	2,115	1,425	995	180	925
5	21	105	F_{2T}(8) (N)	39,333	39,333	39,048	39,048		17,813	3,238	23,714
			T_{2B}(9) (Nm)	2,065	2,065	2,050	2,050		390	170	1,245
	25	125	F_{2T}(8) (N)	40,160	40,160	39,760	39,760		10,640	3,440	23,280
			T_{2B}(9) (Nm)	2,510	2,510	2,485	2,485		665	215	1,455
6	21	126	F_{2T}(8) (N)	57,143	57,143	57,143	57,143		13,651	4,921	40,794
			T_{2B}(9) (Nm)	3,600	3,600	3,600	3,600		860	310	2,570
	25	150	F_{2T}(8) (N)	59,133	59,133	59,067	59,067		20,067	5,200	41,333
			T_{2B}(9) (Nm)	4,435	4,435	4,430	4,430		1,505	390	3,100
8	20	160	F_{2T}(8) (N)	103,750	103,750	103,750	103,750		27,938		81,250
			T_{2B}(9) (Nm)	8,300	8,300	8,300	8,300		2,235		6,500
10	20	200	F_{2T}(8) (N)	165,400	165,400	165,300			55,850		145,200
			T_{2B}(9) (Nm)	16,540	16,540	16,530			5,585		14,520

* The Maximal Driving Torque is also to be understood as the Maximal Acceleration Torque T_{2B}.
The Emergency Stop Torque $T_{2NOT} = 2 \times T_{2B}$, under the condition limited 1000 times in the whole service period.

(1) Number of Teeth (5) Working Pitch Circle Diameter (in mm) (8) Maximum Feed-Force (9) Maximum Driving Torque

Pinion with Straight Teeth

(Interface : Keyway / CP System)

Quality DIN 5 / Alloy Steel
Tooth Thickness Tolerance : e25
Straight Teeth
Case-Hardened and Teeth Ground

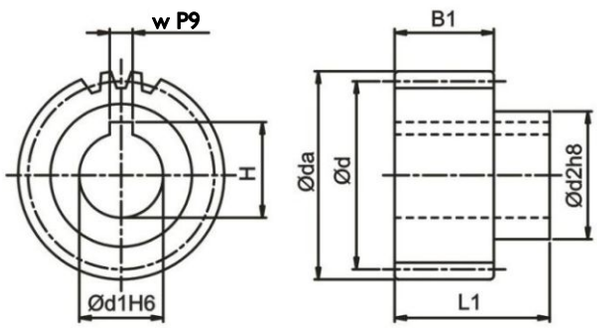

Pitch 5 (Module : 1.591)

z(1)	x(2)	da(3)	d(4)	dw(5)	d1 H6	d2	B1	L1	w P9	H	L(6)	Order code	
												Pinion	Shrink disc
25	0	42.971	39.788	39.788	16	30	25	51	5	18.3	124.996	F1K125B16	SSD-30
30	0	50.928	47.745	47.745	22	36	25	54	6	24.8	149.995	F1K130B22	SSD-36
40	0	66.843	63.66	63.66	25	44	25	56	8	28.3	199.994	F1K140B25	SSD-44

Pitch 10 (Module : 3.183)

z(1)	x(2)	da(3)	d(4)	dw(5)	d1 H6	d2	B1	L1	w P9	H	L(6)	Order code	
												Pinion	Shrink disc
20	0	70.028	63.661	63.662	22	36	31	60	6	24.8	200	F3B120B22	SSD-36
25	0	85.944	79.578	79.578	25	44	31	62	8	28.3	250	F3B125B25	SSD-44
25	0	85.944	79.578	79.578	32	55	31	68	10	35.3	250	F3B125B32	SSD-55

Pitch 13.33 (Module : 4.244)

z(1)	x(2)	da(3)	d(4)	dw(5)	d1 H6	d2	B1	L1	w P9	H	L(6)	Order code	
												Pinion	Shrink disc
20	0	93.368	84.88	84.88	32	55	40	77	10	35.3	266.658	F4D120B32	SSD-55
25	0	114.588	106.1	106.1	40	62	40	77	12	43.3	333.323	F4D125B40	SSD-62

(1) Number of teeth (2) Profile modification factor (3) Diameter of addendum circle (4) Pitch circle diameter
(5) Working pitch circle diameter (6) Pitch circle length L = π x d

Pinion material carburized, the surface hardness reached 60 HRc
Teeth surface ground in order to reduce noise and improve wear resistance
Accessories include hexagon socket head cap screws (Strength 12.9 , DIN 912)

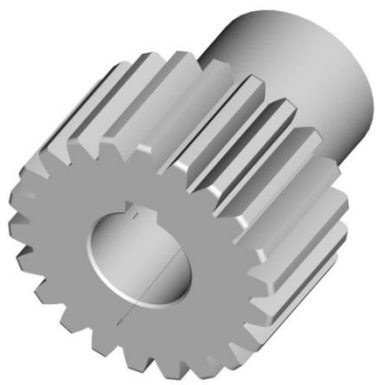

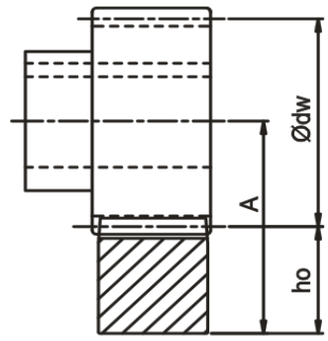

$$A = ho + \frac{\phi\, dw}{2}$$

In Table 12, the maximum permissible torque of CP pinion, and the rack is calculated on the basis of a speed of 1.5 m/s and providing good lubrication (using an automatic lubrication system or manually applied grease every day), the tooth root strength factor $S_F \geqq 1.4$, tooth surface strength coefficient $S_H \geqq 1$, the safety factor $S_B \fallingdotseq 1$, and the required service life of 20,000 hours. By higher speed, the max. permissible torque reduced. The user needs to increase the safety factor for the application.
Backlash changes by different center height. Please contact APEX under WWW.APEXDYNA.COM.

Table 12. The max. permitted torque and feed-force of CP pinion with Keyway

Pinion \ Rack			Teeth Width (in mm)	Quality	Q6	Q8
				Material	Carbon Steel	Carbon Steel
				Heat Treatment	Induction Hardening	Normalizing
Pitch	z(1)	dw(5)		Max. Torque and Feed-Force		
5	25	39.788	19（Q6）	F_{2T}(8) (N)	4,524	754
			20（Q8）	T_{2B}(9) (Nm)	90	15
			24（Q6）	F_{2T}(8) (N)	5,781	1,005
			25（Q8）	T_{2B}(9) (Nm)	115	20
	30	47.745	19（Q6）	F_{2T}(8) (N)	4,398	1,047
			20（Q8）	T_{2B}(9) (Nm)	105	25
			24（Q6）	F_{2T}(8) (N)	5,864	1,257
			25（Q8）	T_{2B}(9) (Nm)	140	30
	40	63.66	19（Q6）	F_{2T}(8) (N)	4,398	1,414
			20（Q8）	T_{2B}(9) (Nm)	140	45
			24（Q6）	F_{2T}(8) (N)	5,655	1,728
			25（Q8）	T_{2B}(9) (Nm)	180	55
10	20	63.662	29（Q6）	F_{2T}(8) (N)	14,451	2,042
			30（Q8）	T_{2B}(9) (Nm)	460	65
	25	79.578	29（Q6）	F_{2T}(8) (N)	14,451	2,765
			30（Q8）	T_{2B}(9) (Nm)	575	110
13.33	20	84.88	39（Q6）	F_{2T}(8) (N)	26,272	4,123
			40（Q8）	T_{2B}(9) (Nm)	1,115	175
	25	106.1	39（Q6）	F_{2T}(8) (N)	26,390	6,221
			40（Q8）	T_{2B}(9) (Nm)	1,400	330

* The Maximal Driving Torque is also to be understood as the Maximal Acceleration Torque T_{2B}.
The Emergency Stop Torque $T_{2NOT} = 2 \times T_{2B}$, under the condition limited 1000 times in the whole service period.

(1) Number of Teeth (5) Working Pitch Circle Diameter (in mm) (8) Maximum Feed-Force (9) Maximum Driving Torque

Pinion with Straight Teeth

(Interface : Long Shaft Pinion with Keyway for Hollow-Shaft)

Quality DIN 5
Tooth Thickness Tolerance : e25
Straight Teeth
Case-Hardened and Teeth Ground

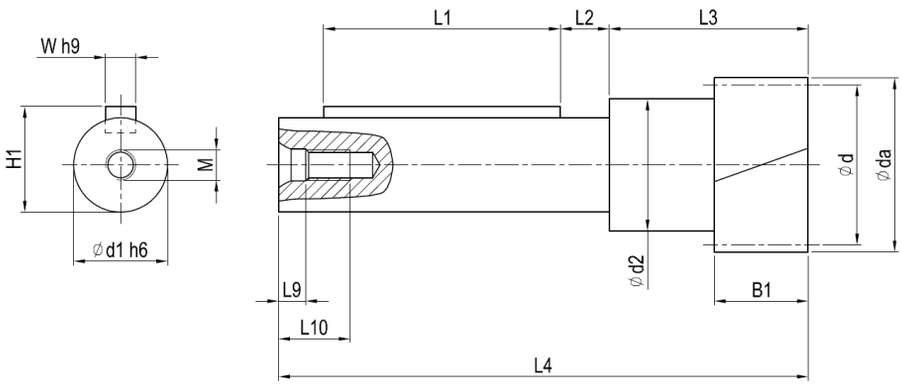

Mn.	z(1)	x(2)	da(3)	d(4)	dw(5)	d1 h6	d2	B1	L1	L2	L3	L4	M	L9	L10	W h9	H1	L(6)	Order Code
2	15	0.36	35.5	30	31.5	20	24	25	28	13.5	50.0	105	M5	4.8	12.5	6	22.5	94.25	G02115D20
	21	0.00	46	42	42	25	35	25	63	13.0	53.0	141	M8	7.2	19	8	28	131.95	G02121D25
	32	0.00	68	64	64	25	38	25	63	13.0	53.0	141	M8	7.2	19	8	28	201.06	G02132D25
	32	0.00	68	64	64	28	42	25	80	14.5	57.5	166	M8	7.2	19	8	31	201.06	G02132D28
	32	0.00	68	64	64	36	48	25	100	12.5	57.0	181	M12	10	28	10	39	201.06	G02132D36
3	21	0.00	69	63	63	25	38	30	63	13.0	55.0	143	M8	7.2	19	8	28	197.92	G03121D25
	21	0.00	69	63	63	28	42	30	80	14.5	60.0	168	M8	7.2	19	8	31	197.92	G03121D28
	21	0.00	69	63	63	36	48	30	100	12.5	62.0	186	M12	10	28	10	39	197.92	G03121D36
4	17	0.00	76	68	68	28	42	40	80	14.5	65.0	173	M8	7.2	19	8	31	213.63	G04117D28
	17	0.00	76	68	68	36	48	40	100	12.5	67.0	191	M12	10	28	10	39	213.63	G04117D36
	17	0.00	76	68	68	48	57	40	125	9.0	72.0	216	M12	10	28	14	51.5	213.63	G04117D48
	30	0.00	128	120	120	48	57	40	125	9.0	72.0	216	M12	10	28	14	51.5	376.99	G04130D48
5	13	0.50	80	65	70	48	57	50	125	9.0	82.0	226	M12	10	28	14	51.5	204.20	G05113D48
	15	0.50	90	75	80	60	68	50	150	10.0	90.0	272	M16	12	36	18	64	235.62	G05115D60
6	13	0.50	96	78	84	60	68	60	150	10.0	100.0	282	M16	12	36	18	64	245.04	G06113D60

(1) Number of teeth (2) Profile modification factor (3) Diameter of addendum circle (4) Pitch circle diameter
(5) Working pitch circle diameter (6) Pitch circle length $L = \pi \times d$

Pinion with Straight Teeth

(Interface : Long Shaft Pinion with Keyway for Hollow-Shaft)

Quality DIN 5
Tooth Thickness Tolerance : e25
Straight Teeth
Case-Hardened and Teeth Ground

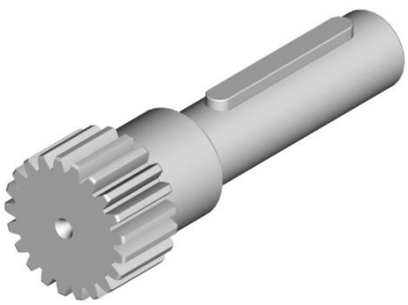

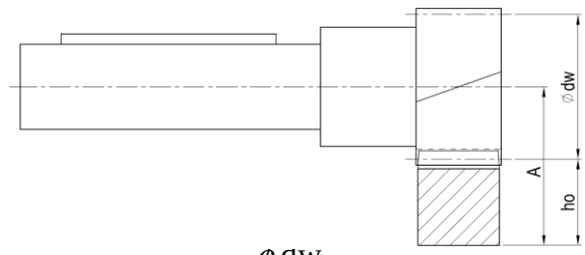

$$A = ho + \frac{\varphi dw}{2}$$

In table 13, the maximum permissible torque of pinion with Long Shaft , and the rack is calculated on the basis of a speed of 1.5 m/s and providing good lubrication (using an automatic lubrication system or manually applied grease every day), the tooth root strength factor $S_F \geqq 1.4$, tooth surface strength coefficient $S_H \geqq 1$, the safety factor $S_B \fallingdotseq 1$, and the required service life of 20,000 hours. By higher speed, the max. permissible torque reduced. The user needs to increase the safety factor for the application.
Backlash changes by different center height. Please contact APEX under WWW.APEXDYNA.COM.

Table 13, the max. permitted torque and feed-force of pinion with Long Shaft

Pinion \ Rack			Quality	Q4	Q5	Q6	Q6M	Q8H	Q8	Q9	Q10
			Material	Carbon Steel	Carbon Steel	Carbon Steel	Carbon Steel	Q&T Alloy Steel	Carbon Steel	Stainless Steel	Carbon Steel
			Heat Treatment	Induction Hardening	Induction Hardening	Induction Hardening	Induction Hardening	Quenched Tempered	Normalizing	Solution	Induction Hardening
Mn	z(1)	dw(5)	Max. Torque * and Feed-Force								
2	15	31.5	F_{2T}(8) (N)		5,333	5,333	5,333		1,000	667	2,000
			T_{2B}(9) (Nm)		80	80	80		15	10	30
	21	42	F_{2T}(8) (N)		7,142	7,142	7,142	1,429	952	476	2,381
			T_{2B}(9) (Nm)		150	150	150	30	20	10	50
	32	64	F_{2T}(8) (N)		7,344	7,188	7,188	2,656	1,719	781	2,188
			T_{2B}(9) (Nm)		235	230	230	85	55	25	70
3	21	63	F_{2T}(8) (N)		13,810	13,492	13,492	3,333	2,063	1,111	6,190
			T_{2B}(9) (Nm)		435	425	425	105	65	35	195
4	17	68	F_{2T}(8) (N)		20,000	19,559	19,559	10,294	4,559	2,059	7,647
			T_{2B}(9) (Nm)		680	665	665	350	155	70	260
	30	120	F_{2T}(8) (N)		25,500	25,083	25,083	16,667	7,333	2,167	11,167
			T_{2B}(9) (Nm)		1,530	1,505	1,505	1,000	440	130	670
5	13	70	F_{2T}(8) (N)	28,615	28,615	28,154	28,154		5,385	2,769	16,615
			T_{2B}(9) (Nm)	930	930	915	915		175	90	540
	15	80	F_{2T}(8) (N)	34,000	34,000	33,467	33,467		7,067	3,200	22,800
			T_{2B}(9) (Nm)	1,275	1,275	1,255	1,255		265	120	855
6	13	84	F_{2T}(8) (N)	42,051	42,051	41,667	41,667		10,256	4,231	31,667
			T_{2B}(9) (Nm)	1,640	1,640	1,625	1,625		400	165	1,235

* The Maximal Driving Torque is also to be understood as the Maximal Acceleration Torque T_{2B}.
The Emergency Stop Torque $T_{2NOT} = 2 \times T_{2B}$, under the condition limited 1000 times in the whole service period.

(1) Number of Teeth (5) Working Pitch Circle Diameter (in mm) (8) Maximum Feed-Force (9) Maximum Driving Torque

Pinion with Straight Teeth

(Interface : Long Shaft Pinion without Keyway for Hollow-Shaft)

Quality DIN 5
Tooth Thickness Tolerance : e25
Straight Teeth
Case-Hardened and Teeth Ground

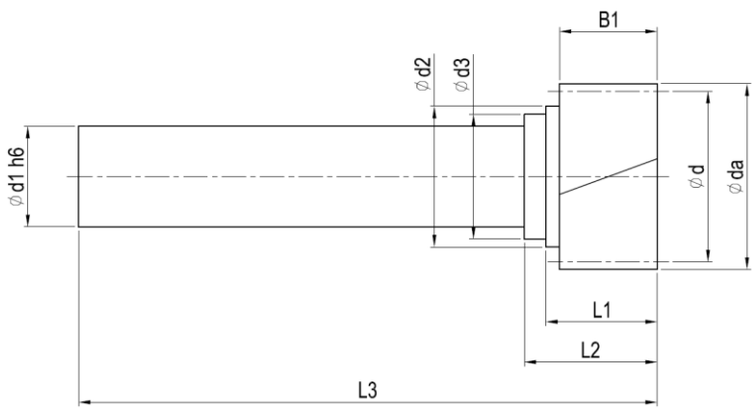

Mn.	z(1)	x(2)	da(3)	d(4)	dw(5)	d1 h6	d2	d3	B1	L1	L2	L3	L(6)	Order Code
2	15	0.375	35.5	30	31.5	20	24	-	25	31	-	105	94.248	H02115D20
	21	0	46	42	42	25	35	31	25	28.5	34	148	131.947	H02121D25
	32	0	68	64	64	25	38	31	25	28.5	34	148	201.062	H02132D25
	32	0	68	64	64	28	42	36	25	33	38.5	180	201.062	H02132D28
	32	0	68	64	64	36	48	-	25	32.5	-	203	201.062	H02132D36
3	21	0	69	63	63	25	31	-	30	36.5	-	150	197.92	H03121D25
	21	0	69	63	63	28	42	36	30	35.5	41	183	197.92	H03121D28
	21	0	69	63	63	36	48	-	30	37.5	-	208	197.92	H03121D36
4	17	0	76	68	68	28	36	-	40	46	-	188	213.628	H04117D28
	17	0	76	68	68	36	48	-	40	42.5	-	213	213.628	H04117D36
	17	0	76	68	68	48	57	-	40	43.5	-	240	213.628	H04117D48
	30	0	128	120	120	48	57	-	40	43.5	-	240	376.991	H04130D48
5	13	0.5	80	65	70	48	57	-	50	53.5	-	250	204.204	H05113D48
	15	0.5	90	75	80	60	68	-	50	55	-	275	235.619	H05115D60
6	13	0.5	96	78	84	60	68	-	60	65	-	285	245.044	H06113D60

(1) Number of teeth (2) Profile modification factor (3) Diameter of addendum circle (4) Pitch circle diameter
(5) Working pitch circle diameter (6) Pitch circle length $L = \pi \times d$

Pinion with Straight Teeth

(Interface : Long Shaft Pinion without Keyway for Hollow-Shaft)

Quality DIN 5
Tooth Thickness Tolerance : e25
Straight Teeth
Case-Hardened and Teeth Ground

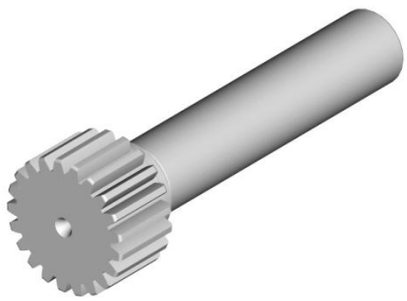

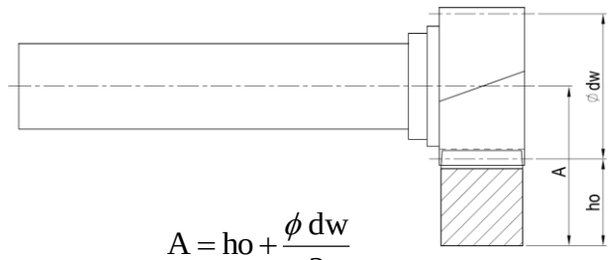

$$A = ho + \frac{\phi\, dw}{2}$$

In table 14, the maximum permissible torque of pinion with Long Shaft, and the rack is calculated on the basis of a speed of 1.5 m/s and providing good lubrication (using an automatic lubrication system or manually applied grease every day), the tooth root strength factor $S_F \geqq 1.4$, tooth surface strength coefficient $S_H \geqq 1$, the safety factor $S_B \fallingdotseq 1$, and the required service life of 20,000 hours. By higher speed, the max. permissible torque reduced. The user needs to increase the safety factor for the application.
Backlash changes by different center height. Please contact APEX under WWW.APEXDYNA.COM.

Table 14, the max. permitted torque and feed-force of pinion with Long Shaft

Pinion \ Rack			Quality	Q4	Q5	Q6	Q6M	Q8H	Q8	Q9	Q10
			Material	Carbon Steel	Carbon Steel	Carbon Steel	Carbon Steel	Q&T Alloy Steel	Carbon Steel	Stainless Steel	Carbon Steel
			Heat Treatment	Induction Hardening	Induction Hardening	Induction Hardening	Induction Hardening	Quenched Tempered	Normalizing	Solution	Induction Hardening
Mn	z(1)	dw(5)	Max. Torque * and Feed-Force								
2	15	31.5	F_{2T}(8) (N)		5,333	5,333	5,333		1,000	667	2,000
			T_{2B}(9) (Nm)		80	80	80		15	10	30
	21	42	F_{2T}(8) (N)		7,142	7,142	7,142	1,429	952	476	2,381
			T_{2B}(9) (Nm)		150	150	150	30	20	10	50
	32	64	F_{2T}(8) (N)		7,344	7,188	7,188	2,656	1,719	781	2,188
			T_{2B}(9) (Nm)		235	230	230	85	55	25	70
3	21	63	F_{2T}(8) (N)		13,810	13,492	13,492	3,333	2,063	1,111	6,190
			T_{2B}(9) (Nm)		435	425	425	105	65	35	195
4	17	68	F_{2T}(8) (N)		20,000	19,559	19,559	10,294	4,559	2,059	7,647
			T_{2B}(9) (Nm)		680	665	665	350	155	70	260
	30	120	F_{2T}(8) (N)		25,500	25,083	25,083	16,667	7,333	2,167	11,167
			T_{2B}(9) (Nm)		1,530	1,505	1,505	1,000	440	130	670
5	13	70	F_{2T}(8) (N)	28,615	28,615	28,154	28,154		5,385	2,769	16,615
			T_{2B}(9) (Nm)	930	930	915	915		175	90	540
	15	80	F_{2T}(8) (N)	34,000	34,000	33,467	33,467		7,067	3,200	22,800
			T_{2B}(9) (Nm)	1,275	1,275	1,255	1,255		265	120	855
6	13	84	F_{2T}(8) (N)	42,051	42,051	41,667	41,667		10,256	4,231	31,667
			T_{2B}(9) (Nm)	1,640	1,640	1,625	1,625		400	165	1,235

* The Maximal Driving Torque is also to be understood as the Maximal Acceleration Torque T_{2B}.
The Emergency Stop Torque $T_{2NOT} = 2 \times T_{2B}$, under the condition limited 1000 times in the whole service period.

(1) Number of Teeth (5) Working Pitch Circle Diameter (in mm) (8) Maximum Feed-Force (9) Maximum Driving Torque

Shrink Disc for Pinion with Keyway

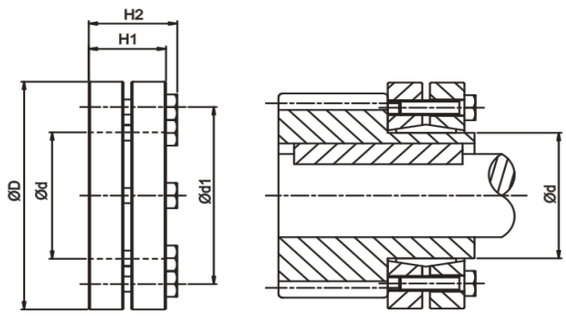

d	d1	D	H1	H2	Screw(1)	T_A(2)	J	Order code
					No. x Type	Nm	Kg.cm²	Stainless Steel
30	44	60	21.5	25	7 x M5	4	1.7	SSD-30
36	52	72	23.5	27.5	5 x M6	12	3.9	SSD-36
44	61	80	25.5	29.5	7 x M6	12	6.4	SSD-44
50	70	90	27.5	31.5	8 x M6	12	11.2	SSD-50
55	75	100	30.5	34.5	8 x M6	12	18.3	SSD-55
62	86	110	30.5	34.5	10 x M6	12	26.5	SSD-62
68	86	115	30.5	34.5	10 x M6	12	30.9	SSD-68
80	100	145	32.5	38	7 x M8	30	86.8	SSD-80
110	145	185	50	57	9 x M10	59	349.6	SSD-110
125	160	215	54	61	12 x M10	59	672.4	SSD-125

(1) 10.9 Class, DIN 931 (2) Tightening Torque

Diameter	Tolerance
≦ 30	H6 / j6
> 30 ~ 50	H6 / h6
> 50 ~ 80	H6 / g6

Pin Gauge

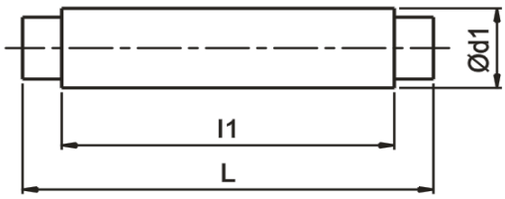

Mn	d1	l1	L	Order Code
1	2	-	20	B020
1.5 / 1.75 / 1.591 (Pitch 5)	3	16	20	B030
2	4.2	20	28	B042
2.5 / 3	5	25	33	B050
4 / 3.183 (Pitch 10) / 4.244 (Pitch 13.33)	7	30	40	B070
4.5 / 5	9	34	42	B090
6	10	35	43	B100
8	14	35	45	B140
10	18	35	42	B180
12	20	43	50	B200

Position Pin

Mn	d1 m6	d2	t1	L	Order Code
1 / 1.5 (B≦17)	6	M4	6	24	PIN-06-L024
1.5 / 1.75	6	M4	6	28	PIN-06-L028
2	6	M4	6	30	PIN-06-L030
2	8	M5	8	30	PIN-08-L030
2.5 / 3 / 3.183 (Pitch 10)	8	M5	8	40	PIN-08-L040
3	12	M6	12	45	PIN-12-L045
4	8	M5	8	50	PIN-08-L050
4	10	M6	10	55	PIN-10-L055
4	12	M6	12	55	PIN-12-L055
4	16	M8	16	60	PIN-16-L060
4.5 / 5	12	M6	12	70	PIN-12-L070
5	16	M8	16	70	PIN-16-L070
6	16	M8	16	80	PIN-16-L080
6	20	M10	18	80	PIN-20-L080
8	20	M10	18	100	PIN-20-L100
10	20	M10	18	120	PIN-20-L120
12	20	M10	18	140	PIN-20-L140

Rack Gauge for Installation

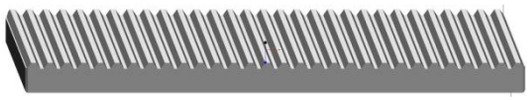

Helical Teeth

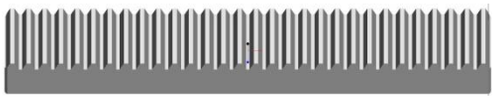

Straight Teeth

Mn	Teeth	L	Teeth No.	f_p (1)	F_p (2)	Order Code
1	Helical	150	45	0.0035	0.01	RGH01
	Straight	141.37	45			RGS01
1.5	Helical	150	30	0.0035	0.01	RGH1J
	Straight	141.37	30			RGS1J
2	Helical	200	30	0.0035	0.013	RGH02
	Straight	188.49	30			RGS02
2.5	Helical	200	24	0.004	0.014	RGH2J
3	Helical	200	20	0.004	0.014	RGH03
	Straight	188.49	20			RGS03
4	Helical	200	15	0.0045	0.015	RGH04
	Straight	188.49	15			RGS04
5	Helical	200	12	0.0045	0.015	RGH05
	Straight	251.32	16			RGS05
6	Helical	200	10	0.0045	0.015	RGH06
	Straight	245.04	13			RGS06
8	Helical	213.33	8	0.005	0.016	RGH08
	Straight	251.32	10			RGS08
10	Helical	233.3	7	0.005	0.016	RGH10
	Straight	219.91	7			RGS10
12	Helical	280	7	0.006	0.017	RGH12
	Straight	263.89	7			RGS12
1.591 (Pitch 5)	Straight	150	30	0.0035	0.01	RGS1K
3.183 (Pitch 10)	Straight	200	20	0.004	0.014	RGS3B
4.244 (Pitch 13.33)	Straight	213.33	15	0.0045	0.015	RGS4D

(1) fp =Single Pitch Error (2) Fp=Total Pitch Error

Rack Size according to DIN 867

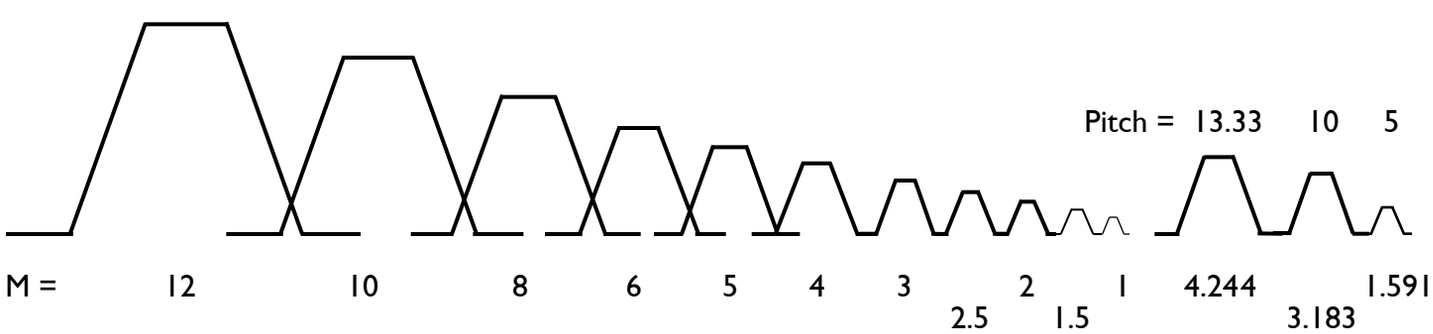

Rack Calculation and Selection

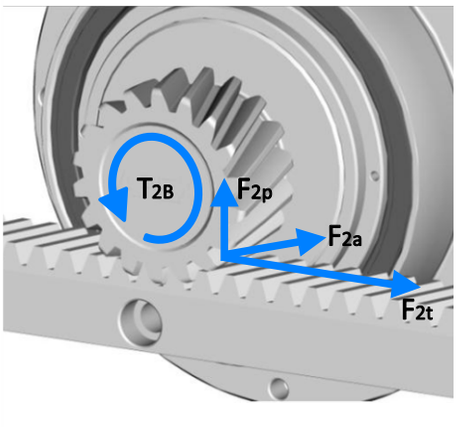

$$F_{2t} = \frac{T_{2B}}{d/2}$$

$$F_{2a} = F_{2t} \times \tan\beta$$

$$F_{2p} = \frac{F_{2t}}{\cos\beta} \times \tan\alpha$$

$$F_{2r} = \sqrt{F_{2p}^2 + F_{2t}^2}$$

d : Pitch Circle Diameter
α : Pressure Angle
β : Helical Angle

Application		Horizontal handling	Vertical lifting
Unit		Application parameters	
Total load weight	M	Kg	Kg
Speed	V	m/s	m/s
Acceleration time	ta	s	s
Gravitational acceleration	g	9.8 m/s^2	9.8 m/s^2
Friction coefficient	μ	-	-
Pitch circle diameter of pinion	d	mm	mm
Other additional forces	F	N	N
Safety factor	S_B(1)	-	-
		Computational formulas	
		a = V / ta (m/s^2)	a = V / ta (m/s^2)
Tangential force of rack	F_N	F_N= M × g × μ + M × a + F (N)	F_N= M × g + M × a + F (N)
Torque	T_N	T_N= (F_N x d) / 2000 (Nm)	T_N= (F_N x d) / 2000 (Nm)
Design demand torque	T_{NV}	T_{NV} = T_N x S_B (Nm)	T_{NV} = T_N x S_B (Nm)
Max. speed of pinion	N_V	N_V = (V x 19100) / d (rpm)	N_V = (V x 19100) / d (rpm)

(1) Please consider the safety factor according to your experience and application, the general recommended range of 1 to 4 (S_B≒ 1 to 4).

Select a suitable pinion.
Calculate the design demand torque (T_{NV})
To choose T_{2B} (> T_{NV}) according to the table "the max. permitted torque and feed-force of pinion"
To select the appropriate gearbox and speed ratio to fit the torque.
Max. Tilting Moment M_{2K} .
Refer to APEX Dynamax for a more detailed calculation.

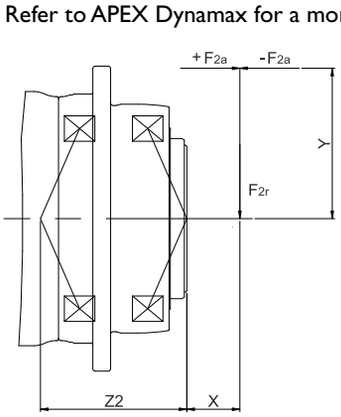

$$M_{2K} = \frac{F_{2a} * Y + F_{2r} * (X+Z2)}{1000}$$

M_{2K} : [Nm]
F_{2a},F_{2r} : [N]
X,Y,Z2 : [mm]

For each M2K data please refer to each product catalog.

APEX DYNAMICS, INC.
No.10, Keyuan3rd Road, SitunDistrict, 40763 Taichung City ,TAIWAN
Tel : +886-4-24650219 Web : www.apexdyna.com Email : sales@apexdyna.com 2022.11.01

APEX TAIWAN NORTH
ANDTEK AUTOMATION CO.,LTD
TEL +886-02-82262655
13F-5, NO.2, Jian 8th Rd., Jhonghe Dist., New Taipei City 235, TAIWAN
sales@andtek.com.tw
www.apexdyan.com

APEX TAIWAN CENTRAL
ANDTEK AUTOMATION CO.,LTD
TEL +886-04-23594286
9F-6, NO.925, Sec.4, Taiwan Blvd., Xitun Dist.
Taichung City 407, TAIWAN
sales@andtek.com.tw
www.apexdyan.com

APEX TAIWAN SOUTH
MEN JENN ELECTRIC CO., LTD.
TEL +886-06-2337332~6
NO.774, Zhonghua Rd., Yongkang Dist., Tainan City 710, TAIWAN
menjenn@ms24.hinet.net
www.apexdyan.com

APEX TAIWAN INC. SHANGHAI
TEL +86-21-69220577
NO.128 ZHUYING Road QINGPU Industry Area, Shanghai, CHINA
sales@apexdyna.cn
www.apexdyan.cn

APEX DYNAMICS SHENZHEN, LTD.
TEL +86-755-84516325
NO. 1102A of D area, CFG mansion, Bao Yuan Road, Bao' an District, Shenzhen, CHINA.
sales@szapexdyna.com
www.szapexdyna.com

APEX DYNAMICS BEIJING, LTD.
TEL +86-10-69570691
NO. 1, Yao Ping Road, Song Zhuang Town, Tongzhou District, Beijing, CHINA.
bjapexdyna@163.com
www.bjapex.cn

CHONGQING APEX DYNAMICS CO., LTD.
TEL +86-23-67686860
406, Building 5, NO. 68, Jinyu Avenue, Beibu New Area, Chongqing, CHINA
sales@cqapexdyna.com
www.apexdyna.com

APEX (XIAMEN) DYNAMICS TECHNOLOGY CO., LTD.
TEL +86-0592-720-5279
Unit B-3, 1F., NO. 129, Jingquan Road, Jimei District, Xiamen, Fujian, CHINA
sales@xmapexdyan.com
www.xmapexdyna.com

APEX DYNAMICS USA, INC.
TEL +1-631-2449040
885 Marconi Avenue Ronkonkoma, NY 11779 U.S.A.
sales@apexdynamicsusa.com
www.apexdynamicsusa.com

APEX DYNAMICS KOREA INC
TEL +82-31-8179992
7-5, Aenigol-gil, Ilsandong-gu, Goyang-si, Gyeonggi-do, Republic of Korea 10301
sales@apexdynakorea.co.kr
www.apexdynakorea.co.kr

APEX DYNAMICS JAPAN
TEL +88-092-4511202
1-3-46, Hanmichibasi, Hakata-ku, Fukuoka, 812-0897, JAPAN
sales@apexdyna.jp
www.apexdyna.jp

APEX DYNAMICS SINGAPORE PTE LTD
TEL +65-62-626228
3 South Buona Vista Road, #05-15 & #06-15. SINGAPORE 118136
sales@apexdyna.com.sg
www.apexdyna.com.sg

APEX DYNAMICS (THAILAND) CO., LTD.
TEL +66-2-326623
87 Soi Ladkrabang 30, Ladkrabang, Ladkrabang, Bangkok 10520, Thailand
Apexthai2010@gmail.com
www.apexdyna.co. th

APEX DYNAMICS BV
TEL +31-492-509995
Churchilllaan 101 5705 BK Helmond, NETHERLANDS
sales@apexdyna.nl
www.apexdyna.nl
www.apexdyna.be

APEX DYNAMICS
POLSKA SP. Z O.O.
TEL +48-12-6304728
Ul. Krakowska 50, 32-083 Balice, Poland
sales@apexdyna.pl
www.apexdyna.pl

APEX DYNAMICS SPAIN, S.L.
TEL +34-93-6562990
Poligono Industrial Molí dels Frares, Calle C nº 12,08620-Sant Vicenç dels Horts, Barcelona, SPAIN
apexdyna@apexdyna.es
www.apexdyna.es

Big Diamond Trading Company LLC
TEL +968-94268885
2nd floor, Regus, Tamimah building, Al Wattayah,Muscat, Oman
ar.gorji@diamondtradings.com

APEKS DINAMIK REDUKTOR DISLI SAN TIC AS
TEL +90-232-4589960
10053 SOKAK NO: 9 A.O.S.B. CIGLI-IZMIR-TURKEY
sales@apexdyna.com.tr
www.apexdyna.com.tr

APEX DYNAMICS AUSTRALIA PTY LTD.
TEL +613-95-852739
36 Taunton Drive,Cheltenham, Victoria 3192 AUSTRALIA.
sales@apexdyna.com.au
www.apexdyna.com.au

APEX DYNAMICS (I) JV
TEL +91-9607927142
Shop No. 02, S. No. 100/5, Pune-Satara Highway, Ambegaon Khurd, Pune-411046 Maharashtra, India
sales@apexdyna.co.in
www.apexdyna.co.in

APEX DYNAMICS FRANCE SAS
TEL +33-160-135097
11 - Burospace - 91570 - Bièvres, France
info@apexdyna.fr
www.apexdyna.fr

APEX DYNAMICS SWEDEN AB
TEL +46-75-2424444
Fredrikbergsgatan 2 SE-573 92 Tranås, SWEDEN
sales@apexdyna.se
www.apexdyna.se

PT.APEX DYNAMICS INDONESIA
TEL +62 21 2928 3681
Rukan Aralia Blok HY43 no.11, Harapan Indah II, Bekasi - Jawa Barat, INDONESIA 17214
sales@apexdyna.co.id
www.apexdyna.co.id

APEX DYNAMICS GERMANY GMBH
TEL +49-7171 798069-0
Marie-Curie-Straße 25 D-73529 Schwäbisch Gmünd
werner.langer@apexdynamics.de
www.apexdynamics.de

APEX DYNAMICS CZECH S.R.O.
TEL +420-577-663877
tř. Tomáše Bati 1851 765 02 Otrokovice Česká REPUBLIKA
info@apexdynaczech.cz
www.apexdynaczech.cz

APEX DYNAMICS РОССИЯ
TEL +7-495-2255452
TEL +7-495-6462422
г.Москва,ул. Южнопортовая, дом 7, строение "С", 3-й этаж
info@apexdynarussia.ru
www.apexdynarussia.ru

APEX DYNAMICS MIDLANDS LTD
TEL +44-0121-737-1170
Heath House, Cheadle Rd, Uttoxeter, ST14 7BY, UK
mikeg@apexdynauk.com
www.apexdynauk.com

APEX DYNAMICS SWITZERLAND AG
TEL +41-55-4517020
Obergasse 40, CH-8854 Galgenen, Switzerland
info@apexdyna.ch
www.apexdyna.ch

APEX DYNAMICS MOTION (M) SDN BHDTEL
TEL +60 7237 1055
Block A1-2, #35-03, Mercu 1 Jalan Tanjung Puteri 1, R & F Tanjung Puteri, Johor Bahru 80300, Johor.
sales@apexdyna.com.sg
www.apexdyna.com.sg

APEX DYNAMICS BRAZIL
TEL +55-47-30298700
Rua Senador Petrônio Portela, 47-Bloco 5, Zona Industrial Norte-CEP 89218-575-Joinville (SC)
lucan@neoyama.com.br
adriano.duarte@neoyama.com.br
www.neoyama.com.br

APEX DYNAMICSITALY SRL
TEL +39 02 36634521
VIA E. DE AMICIS, 2-20091 BRESSO (MI)
info@apexdynamics.it
www.apexdynamics.it

APEX DYNAMICS AUSTRIA GmbH
TEL +43 720788416
Dr. Hans-Lechner-Strasse 6, 5071 Wals-Siezenheim
info@apexdynamics.at
www.apexdynamics.at

UAB "APEKSO DINAMIKA"
TEL +370 52078165
Medaus g. 28A, Medininku k., Vilniaus r. Sav. LT-13192
info@apexdyna.lt
www.apexdyna.lt

APEX DYNAMICS DENMARK
TEL +45 73121260
Grundtvigs Allé 165, 6400 Sønderborg, Denmark
sales@apexdyna.dk
www.apexdyna.dk

APEX DYNAMICS ISRAEL
TEL +972-3-6470471
17 Hamefalsim St., Kiryat Arye, Petach-Tikva 4951447
Sales@apexdynamics.co.il
www.apexdynamics.co.il

APEX DYNAMICS SLOVAKIA S.R.O.
TEL +421919400476
Trenčianska cesta 887/52, 957 01 Bánovce nad Bebravou, Slovak republic
office@apexdyna.sk
www.apexdyna.sk